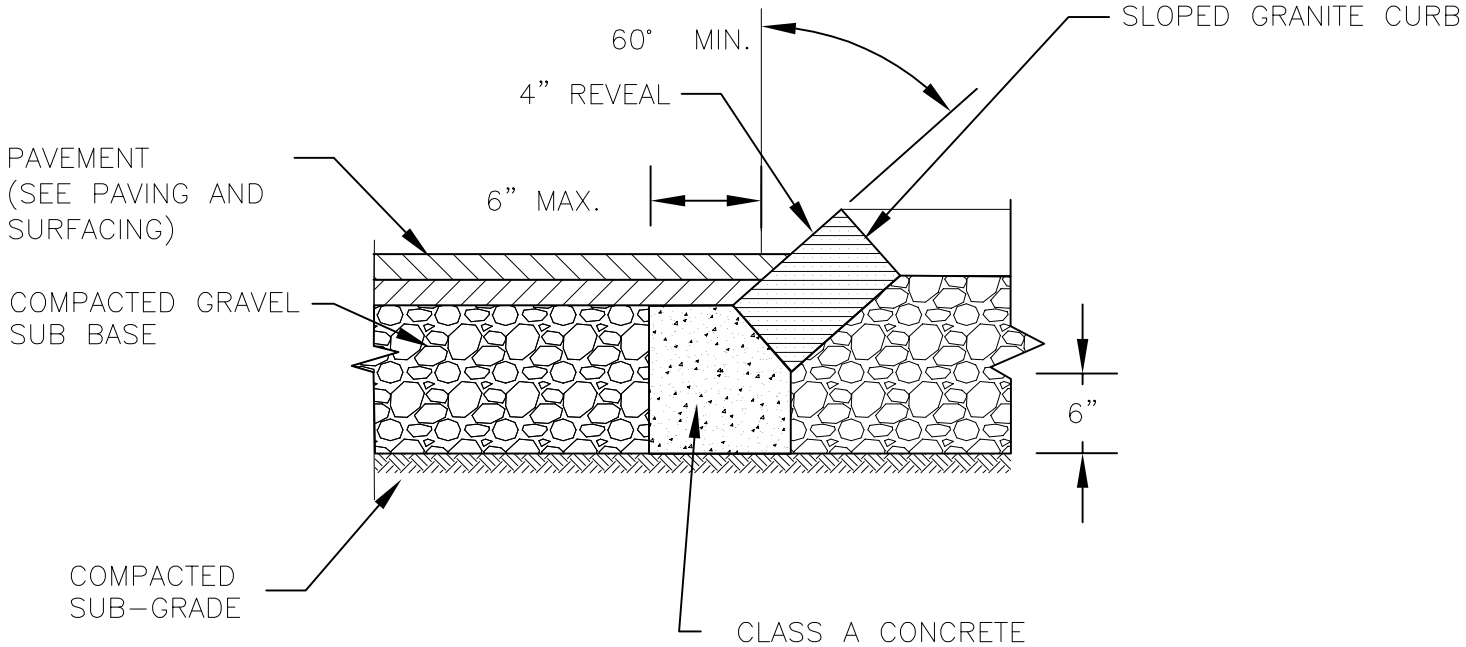

NOTES:

1. PLACE AND COMPACT GRAVEL PRIOR TO SETTING SLOPED GRANITE CURB

95% DETAILS
NOT FOR CONSTRUCTION

THE WORKS
CAMBRIDGE DEPARTMENT OF PUBLIC

SLOPED GRANITE CURB DETAIL			
CITY OF CAMBRIDGE STANDARD SPECIFICATIONS AND DETAILS			
SCALE: N.T.S.	DATE OF ISSUE: 02/05	SPEC. SECTION REF#: 02524	2524.2