GENERAL NOTES

1. EXACT DEPTHS OF PAVEMENT BASES AND SURFACE COURSES ARE NOT KNOWN AND SHALL BE VERIFIED IN THE FIELD BY THE CONTRACTOR. APPROXIMATE DEPTHS OF PAVEMENT BASES AND SURFACE COURSES ARE INDICATED IN THE BORING LOGS.

2. IT IS INTENDED THAT THE EXISTING SANITARY SERVICES BE UTILIZED. THE OWNER OR ENGINEER WILL DETERMINE, IN EACH CASE, IF THE EXISTING SANITARY SERVICE IS IN ACCEPTABLE CONDITION OR TO BE REPLACED TO PROPERTY LINE.

3. EXISTING SANITARY SEWER SERVICES ARE, IN GENERAL, 6 INCHES IN DIAMETER, BUT LARGER OR SMALLER SERVICES MAY BE ENCOUNTERED. SANITARY SERVICES 6 INCHES IN DIAMETER AND SMALLER SHALL BE REPLACED WITH NEW 6–INCH DIAMETER PVC PIPE, AND SANITARY SERVICES LARGER THAN 6 INCHES IN DIAMETER SHALL BE REPLACED WITH AN EQUAL SIZE PVC SERVICE AS THE EXISTING.

4. DIVERSION, BYPASS, AND CONTROL OF SANITARY SEWER,STORM DRAIN AND DEWATERING FLOWS ARE THE RESPONSIBILITY OF THE CONTRACTOR. THE CONTRACTOR'S INTENDED DIVERSION, BYPASS, AND CONTROL, AND DEWATERING PLANS SHALL BE SUBMITTED TO THE OWNER AND ENGINEER FOR REVIEW PRIOR TO ANY EXCAVATION.

5. THE CONTRACTOR SHALL TEMPORARILY MATCH EXISTING GRADES AND CONDITIONS WITHIN THE CONSTRUCTION AREA UNTIL FINAL RESTORATION IS COMPLETE.

6. CONTRACTOR SHALL PLUG OPENINGS IN EXISTING CATCH BASINS AND MANHOLES WHEN DRAWINGS INDICATE THAT PIPES ARE TO BE REMOVED OR ABANDONED. PLUG SHALL BE WATERTIGHT.

7. CONTRACTOR SHALL CUT OPENINGS IN EXISTING CATCH BASINS AND MANHOLES FOR NEW PIPES WHEN EXISTING STRUCTURES ARE TO BE INCLUDED IN THE PROPOSED COLLECTION SYSTEM. NEW CONNECTIONS SHALL BE SEALED WATERTIGHT. ALL NEW PENETRATIONS SHALL BE CIRCULAR CORED OPENINGS. SAW CUT OR HAMMERED NON–CIRCULAR OPENINGS ARE NOT ALLOWED.

8. WHEN PERFORMING DEWATERING, THE CONTRACTOR SHALL ADHERE TO THE REQUIREMENTS OF SECTION 02210, SECTION 01500, SECTION 02140, AND ALL DEWATERING PERMITS.

9. ALL EXTERIOR SURFACES OF CONCRETE STRUCTURES SHALL BE COATED IN ACCORDANCE WITH SPECIFICATION SECTION 07160 BITUMINOUS DAMPROOFING.

10. EXISTING AND PROPOSED ROADWAY CENTERLINE ELEVATIONS ARE SHOWN ON THE ROADWAY DESIGN DRAWINGS. ELEVATIONS SHOWN ON CIVIL DRAWING PROFILES ARE EXISTING CENTERLINE ELEVATION ONLY.

11. CONTRACTOR SHALL REFER TO THE CAMBRIDGE WATER DEPARTMENT, CONSTRUCTION AND OPERATING PRACTICES IN THE CONTRACT SPECIFICATION FOR ADDITIONAL CONSTRUCTION DETAILS.

12. PRIOR TO EXCAVATION, THE CONTRACTOR SHALL FIELD VERIFY THE FUNCTION (SANITARY SEWER OR STORM DRAIN) OF ALL EXISTING SERVICES, AND SHALL THEN CONNECT EACH SERVICE TO THE APPROPRIATE SANITARY SEWER OR STORM DRAIN. THE COST OF THIS VERIFICATION IS CONSIDERED INCIDENTAL TO THE COST OF THE CONTRACT AND NOT ELIGIBLE FOR SEPARATE PAYMENT.

13. THE LOCATION OF EXISTING UNDERGROUND PIPES, CABLES, CONDUITS AND STRUCTURES AS SHOWN HAS BEEN COLLECTED FROM THE BEST AVAILABLE SOURCES AND THE OWNER TOGETHER WITH ITS AGENTS DOES NOT IMPLY OR GUARANTEE THE DATA AND INFORMATION IN CONNECTION WITH THE UNDERGROUND PIPES, CABLES, CONDUITS, STRUCTURES AND SUCH OTHER PARTS AS TO THEIR COMPLETENESS NOR THEIR LOCATIONS AS INDICATED. THE CONTRACTOR SHALL CONTACT UTILITY OWNERS AND REQUEST MARKING LOCATION OF ALL THEIR LINES IN THE WORK AREAS. THE CONTRACTOR SHALL ASSUME THAT THERE ARE EXISTING WATER, GAS, AND OTHER UTILITY CONNECTIONS TO EACH AND EVERY BUILDING ENROUTE, WHETHER THEY APPEAR ON THE PLANS OR NOT. ANY EXPENSE AND/OR DELAY OCCASIONED BY THESE UTILITIES AND STRUCTURES OR DAMAGE THERETO, INCLUDING THOSE NOT SHOWN, SHALL BE THE RESPONSIBILITY OF THE CONTRACTOR AND AT NO ADDITIONAL EXPENSE TO THE OWNER. (SEE SPECIAL CONDITIONS).

14. FOUNDATIONS AND LINES FOR SERVICES, POLICE AND FIRE ALARM BOXES, STREET LIGHTS, AND TRAFFIC SIGNALS ARE NOT SHOWN ON THE PLANS. THE APPROPRIATE UTILITY COMPANIES OR AUTHORITIES SHOULD BE CONTACTED AND CONSULTED FOR LOCATIONS OF THE ABOVE.

15. THE CONTRACTOR SHALL PREMARK THE EXCAVATION AREA IN WHITE AND NOTIFY THE DIG SAFE CENTER (TEL. NO.1–888–DIG–SAFE) AT LEAST 72 BUSINESS HOURS PRIOR TO ANY EXCAVATION WORK. IN ADDITION, NOTIFICATION SHALL ALSO BE GIVEN TO ALL AFFECTED PRIVATE AND/OR PUBLIC UTILITIES TO PERMIT STREET MARKING OF THEIR LINES.

16. THE STATIONS AS SHOWN FOR SEWERS AND DRAINS ARE APPROXIMATE. THE EXACT STATIONS SHALL BE DETERMINED BY THE CONTRACTOR AND RECORDED ON THE RECORD DRAWINGS.

17. ALL EXISTING MANHOLE FRAMES, COVERS, CATCH BASIN FRAMES AND GRATES REMOVED SHALL REMAIN THE PROPERTY OF THE OWNER AND THEN LATER BE SELECTED BY THE OWNER AND DELIVERED BY THE CONTRACTOR TO A LOCATION DESIGNATED BY THE OWNER. ALL REMAINING FRAMES, COVERS AND GRATES NOT SELECTED BY AND DELIVERED TO THE OWNER SHALL BE DISPOSED OF BY THE CONTRACTOR AT NO ADDITIONAL COST TO THE OWNER.

18. BORINGS WERE TAKEN FOR THE PURPOSE OF DESIGN AND INDICATE CONDITIONS AT THE LOCATION OF THE BORING ONLY. SUBSURFACE CONDITIONS ENCOUNTERED DURING CONSTRUCTION MAY VARY FROM THOSE SHOWN IN THE BORING LOGS. GROUNDWATER LEVELS INDICATED IN THE BORING LOGS ARE THOSE EXISTING AT THE TIME SUBSURFACE INVESTIGATIONS WERE MADE AND DO NOT REPRESENT PERMANENT GROUNDWATER LEVELS. FOR BORING LOGS, SEE THE SPECIFICATIONS.

19. TEST PITS SHALL BE EXCAVATED AT THOSE LOCATIONS INDICATED ON THE DRAWINGS AND WHERE ORDERED OR APPROVED BY THE OWNER. ALL TEST PIT EXCAVATIONS SHALL BE MADE TO DETERMINE THE LOCATIONS OF EXISTING UTILITIES OR STRUCTURES AND PERFORMED WELL IN ADVANCE OF CONSTRUCTION OPERATIONS SO THAT ANY CHANGES IN ALIGNMENT AND/OR GRADE OF THE PROPOSED WORK OR UTILITY LOCATIONS MAY BE DETERMINED. ALL DECISIONS RELATIVE TO UTILITY CONFLICTS AND RELOCATION REQUIREMENTS WILL BE MADE BY THE UTILITY OWNER.

20. AT THOSE LOCATIONS WHERE EXPLORATORY TEST PITS ARE REQUIRED TO DETERMINE THE LOCATION OF EXISTING UTILITIES, THE CONTRACTOR SHALL NOTIFY THE UTILITY COMPANIES INVOLVED AT LEAST 72 HOURS PRIOR TO EXCAVATION OF THE TEST PITS.

21. WHERE TEMPORARY OR PERMANENT UTILITY RELOCATION IS REQUIRED, THE CONTRACTOR SHALL NOTIFY THE AFFECTED UTILITY COMPANY 30 DAYS IN ADVANCE OF CONSTRUCTION AND SHALL COORDINATE THE NEW WORK WITH THE UTILITY RELOCATION.

22. THE CONTRACTOR SHALL COORDINATE THE RELOCATION OF WATER MAINS WITH THE RESIDENT ENGINEER AND THE CITY WATER DEPARTMENT.

23. LOCATIONS OF WATER, SANITARY, AND DRAINAGE SERVICE CONNECTIONS SHALL BE DETERMINED DURING CONSTRUCTION, IN CONSULTATION WITH PROPERTY OWNER AND CITY.

24. THE LIMITS OF BELOW GRADE EXCAVATIONS FOR NEW PIPELINES OR STRUCTURES ARE APPROXIMATE. ACTUAL HORIZONTAL AND VERTICAL LIMITS INCLUDING MEASUREMENT FOR THE NEW WORK SHALL BE APPROVED BY THE ENGINEER DURING CONSTRUCTION.

25. INTERRUPTIONS OF SERVICES SHALL NOT BE PERMITTED. THE CONTRACTOR SHALL COORDINATE WITH ALL UTILITIES AND PROVIDE ALL TEMPORARY UTILITIES AND CONNECTIONS TO AVOID INTERRUPTIONS OF WATER, SANITARY, DRAINAGE, ELECTRIC, PHONE, GAS, FIBEROPTICS, AND CABLE SERVICES.

26. PRIOR TO BEGINNING WORK THE CONTRACTOR SHALL FIELD VERIFY EXISTING CONDITIONS INFORMATION AND REPORT ANY DISCREPANCIES BETWEEN THE PLANS AND THE ACTUAL CONDITIONS TO THE ENGINEER.

27. THE CONTRACTOR SHALL PROVIDE ALL EROSION AND SEDIMENT CONTROL DEVICES, AND SHALL NOT COMMENCE CONSTRUCTION UNTIL THESE MEASURES HAVE BEEN INSTALLED AND APPROVED BY THE ENGINEER.

28. THE CONTRACTOR SHALL PROTECT ALL TRAVELED WAYS FROM DUST AND CONSTRUCTION DEBRIS AT ALL TIMES.

29. UNLESS OTHERWISE INDICATED ON THE DRAWINGS ALL AREAS ADJACENT TO THE LIMITS OF CONSTRUCTION WHICH ARE DISTURBED DURING CONSTRUCTION SHALL BE RESTORED BY THE CONTRACTOR TO THEIR ORIGINAL CONDITION AT NO ADDITIONAL COST TO THE OWNER.

30. THE CONTRACTOR SHALL REMOVE AND DISPOSE OF ALL DEMOLISHED MATERIALS, RUBBISH, EXCAVATED MATERIAL AND DEBRIS, UNLESS OTHERWISE NOTED, AND IN ACCORDANCE WITH ALL LOCAL, STATE AND FEDERAL REQUIREMENTS HAVING JURISDICTION. THE CONTRACTOR SHALL BE RESPONSIBLE FOR OBTAINING AND PAYING FOR ALL DISPOSAL PERMITS AT NO ADDITIONAL COST TO THE OWNER.

31. THE CONTRACTOR MAY BE ASKED BY THE OWNER TO SUSPEND CONSTRUCTION OPERATIONS TEMPORARILY TO AVOID CONFLICTS WITH LARGE PUBLIC EVENTS OR LARGE STORM EVENTS. THE CONTRACTOR SHALL NOT BE COMPENSATED FOR COSTS RELATING TO SHUTDOWNS FOR THESE REASONS.

32. THE CONTRACTOR SHALL NOT BLOCK ACCESS TO STREET AND PRIVATE PARKING IN THE VICINITY OF THE LIMITS OF CONSTRUCTION AFTER WORK HOURS AND ON WEEKENDS.

33. THE CONTRACTOR SHALL BE RESPONSIBLE FOR SNOW PLOWING AND SNOW REMOVAL FROM ALL AREAS WHERE HIS PRESENCE IS MAINTAINED INCLUDING BUT NOT LIMITED TO, UNPAVED SURFACES, PARKED EQUIPMENT AREAS OR ANY CONSTRUCTION ACTIVITY. THE CONTRACTOR SHALL ALSO BE RESPONSIBLE FOR STREET SWEEPING, SNOW REMOVAL FROM SIDEWALKS, TRASH REMOVAL, AND RECYCLABLE MATERIALS FROM ALL AREAS WHERE CONSTRUCTION RESTRICTS VEHICULAR OR PEDESTRIAN ACCESS TO STREETS OR SIDEWALKS AND WHERE CONTRACTORS PRESENCE INTERFERES WITH MUNICIPAL TRASH REMOVAL, STREET SWEEPING, OR SNOW PLOWING AND REMOVAL.

34. AREAS WITHIN THIS CONTRACT ARE SUBJECT TO THE UTILITY RELATED ABATEMENT MEASURE REGULATIONS OF THE MASSACHUSETTS CONTINGENCY PLAN 310 CMR 40.00 AND SECTIONS 02010 – SUBSURFACE INVESTIGATION, 02080 – WASTE MANAGEMENT, 02095 – TRANSPORTATION AND DISPOSAL OF WASTE MATERIAL, OF THE SPECIFICATIONS. THE CONTRACTOR'S ATTENTION IS SPECIFICALLY DIRECTED TO ENVIRONMENTAL DATA (SOIL AND GROUND WATER) FROM BORINGS AND MONITORING WELLS AS REPRESENTATIVE OF SUBSURFACE CONDITIONS IN URBAN AREAS. THE ENVIRONMENTAL DATA ARE APPENDED TO THE SPECIFICATIONS.

35. THE CONTRACTOR SHALL NOT BE PERMITTED TO STARTUP OR OPERATE EQUIPMENT BEFORE OR AFTER ESTABLISHED WORKING HOURS OF 7:00 AM TO 4:00 PM, MONDAY THROUGH FRIDAY WITHOUT WRITTEN APPROVAL OF THE OWNER, UNLESS NOTED OTHERWISE.

SURVEYING NOTES

1. THETOPOGRAPHIC, SITE DETAIL & SURFACE IMPROVEMENTS DEPICTED HEREON WERE OBTAINED FROM AN INSTRUMENT SURVEY CONDUCTED ON THE GROUND BY HARRY R. FELDMAN, INC. DURING OCTOBER 2003.

2. ALL UNDERGROUND UTILITIES AS SHOWN WERE COMPILED UTILIZING FIELD SURVEY INFORMATION AND AVAILABLE RECORD INFORMATION.

3. RECORD UTILITY INFORMATION FROM THE VARIOUS UTILITY COMPANIES AND PUBLIC AGENCIES, ARE APPROXIMATE ONLY AND ACTUAL LOCATIONS SHALL BE VERIFIED IN THE FIELD BY THE CONTRACTOR.

4. ALL UTILITY COMPANIES, PUBLIC AND PRIVATE, MUST BE NOTIFIED, INCLUDING THOSE IN CONTROL OF UTILITIES NOT SHOWN ON THIS PLAN, (SEE CHAPTER 370, ACTS OF 1963, MASSACHUSETTS) PRIOR TO EXCAVATING, INSTALLING, BACKFILLING, GRADING, PAVEMENT RESTORING OR REPAVING.

5. THE OWNER AND ENGINEER ASSUME NO RESPONSIBILITY FOR DAMAGES INCURRED AS A RESULT OF UTILITIES OMITTED OR INACCURATELY SHOWN.

6. ELEVATIONS REFER TO NGVD 1929 DATUM. BENCHMARK TBM#P–3 FOR THIS PROJECT IS THE FRONT BOLT OF THE HYDRANT LOCATED ABOUT 120'± DOWN THE DRIVEWAY TO PARKING LOT ON EAST SIDE OF THE BUILDING WITH AN ADDRESS OF #100 CAMBRIDGEPARK DRIVE, ELEVATION 9.19' (NGVD).

7. PROPERTY LINES OF PRIVATE OWNERSHIP HAVE BEEN TAKEN FROM CITY OF CAMBRIDGE ASSESSOR MAPS AND SHOULD BE CONSIDERED APPROXIMATE.

SPECIAL NOTES FOR TREE PROTECTION

1. REFER TO "CITY OF CAMBRIDGE DEPARTMENT OF PUBLIC WORKS–DIVISION OF URBAN FORESTRY, TREE PROTECTION DURING CONSTRUCTION" IN THE CONTRACT DOCUMENTS.

2. A MASSACHUSETTS OR INTERNATIONAL CERTIFIED ARBORIST SHALL BE SUB–CONTRACTED BY THE CONTRACTOR TO PROVIDE A TREE PROTECTION PLAN AND PERFORM SPECIFIED WORK.

3. ALL TREES NOT IDENTIFIED FOR REMOVAL SHALL BE PROTECTED AGAINST CONSTRUCTION AND TRUCKING RELATED DAMAGE TO THEIR TRUNKS, ROOTS, AND LIMBS. TREE TRUNKS SHALL BE WRAPPED AND/OR BARRICADED FOR PROTECTION IF NECESSARY. TREE LIMBS SHALL BE TEMPORARILY SUPPORTED TO AVOID DAMAGE AND/OR PROFESSIONALLY PRUNED IF THEY CAN NOT BE AVOIDED. BREAKAGE OF THE LIMBS SHALL NOT BE PERMITTED. IN ADDITION TO THE "CONSTRUCTION PRUNING" SPECIFICALLY IDENTIFIED, ALL TREES WITHIN THE PROJECT AREA AND ALONG TRUCK ROUTE, SHALL BE PROTECTED FROM DAMAGE OR PROFESSIONALLY PRUNED. "CONSTRUCTION PRUNING" SHALL CONSIST OF SQUARELY CUTTING LIMBS ONLY WHERE THEY CANNOT BE AVOIDED BY TRUCKS OR EQUIPMENT (RAISE PRUNING).

4. ALL TREE PROTECTION MEASURES AND OPERATIONS AND ALL ROOT PRUNING, TREE REMOVAL, AND TREE PRUNING SHALL BE SUBJECT TO REVIEW, APPROVAL OR CHANGE BY THE CITY ARBORIST.

5. AT THE OWNER'S DISCRETION, THE CONTRACTOR SHALL BE RESPONSIBLE FOR THE REMOVAL ANY TREE DAMAGED BY CONSTRUCTION OR TRUCKING OPERATIONS, REMOVAL OF THE STUMP, AND REPLACEMENT OF THE TREE IN KIND AT NO ADDITIONAL COST TO THE OWNER. ADDITIONAL FINES MAY ALSO BE IMPOSED FOR DAMAGE AS PER CONTRACT SPECIFICATIONS.

6. BREAKAGE OF TREE ROOTS SHALL NOT BE PERMITTED AND ROOT PRUNING SHALL BE MINIMIZED. TREE ROOTS THAT CANNOT BE AVOIDED DURING CONSTRUCTION SHALL BE PRUNED IN ACCORDANCE WITH THE SPECIFICATIONS AND UNDER SUPERVISION OF THE CITY ARBORIST, INCLUDING ROOT TREATMENT IF REQUIRED.

7. THE CONTRACTOR SHALL COORDINATE WITH DIG SAFE PRIOR TO REMOVING ANY STUMPS. DAMAGE TO EXISTING SIDEWALKS AND UTILITIES SHALL BE REPAIRED AS SPECIFIED AFTER REMOVING STUMPS.

8. TREES AND STUMPS REMOVED DURING CONSTRUCTION SHALL BE REPLACED WITH NEW TREES AS DIRECTED. STUMP REMOVAL SHALL BE SUFFICIENT TO ALLOW PLANTING OF NEW TREE.

SURVEY LEGEND

EXISTING	DESCRIPTION
	DRAIN MANHOLE
	ELECTRIC MANHOLE
	MBTA MANHOLE
	SEWER MANHOLE
	WATER MANHOLE
MH	MANHOLE
	CATCH BASIN
	DOUBLE CATCH BASIN
	CATCH BASIN–ROUND
	GUTTER INLET
	GAS SHUT OFF
	WATER SHUT OFF
	HYDRANT
	FIRE ALARM
	OBSERVATION WELL
ICV	IRRIGATION CONTROL VALVE
	UTILITY POLE
	LIGHT POLE
WL	WALK LIGHT
F.P.	FLAG POLE
F.L.	FLOOD LIGHT
	ELECTRIC HANDHOLE
SO	SHUT OFF
	TRAFFIC SIGNAL
	TRAFFIC CONTROL BOX
	SIGN
	BOLLARD
WF#10	WETLAND FLAG & NUMBER
	HANDICAP RAMP
	TREE
12.54	SPOT ELEVATION
R=	RIM ELEVATION
GR.=	GRATE ELEVATION
I=	INVERT ELEVATION
BOT.=	BOTTOM ELEVATION
D.I.=	DROP INLET ELEVATION
TB=	TOP OF BELL ELEVATION
T.O.D.=	TOP OF DEBRIS ELEVATION
T.O.P.=	TOP OF PIPE ELEVATION
T.O.W.=	TOP OF WATER ELEVATION
TT=	TOP TRAP ELEVATION
ENT.=	ENTRANCE ELEVATION
SE=	SILL ELEVATION
N.V.P.	NO VISIBLE PIPES
T	TOP
B	BOTTOM
TB	TOP OF BERM
BB	BOTTOM OF BERM
TC	TOP OF CURB
BC	BOTTOM OF CURB
TS	TOP OF STEPS
BS	BOTTOM OF STEPS
TW	TOP OF WALL
BW	BOTTOM OF WALL
BIT.	BITUMINOUS
CONC.	CONCRETE
CC	CONCRETE CURB
VGC	VERTICAL GRANITE CURB
C.P.	CONCRETE PAD
CR.	CRUSHED
F.S.	FLAGSTONE
GRAN.	GRANITE
LST	LANDSCAPE TIMBER
M.B.	MAILBOXES
T.B.	TELEPHONE BOOTH
C.L.F.	CHAIN LINK FENCE
P.C.F.	POST AND CHAIN FENCE
W.F.	WOOD FENCE
	EDGE OF BRUSH
—X—X—X—X—	CHAIN LINK FENCE LINE
	WOOD FENCE LINE
	POST & CHAIN FENCE LINE
	WETLAND LINE & FLAG LOCATION
	BOUNDARY LINE
SS	SEWER
SD	DRAIN
CS	COMBINED SEWER
C	CABLE TELEVISION
W	WATER
G	GAS
E	ELECTRIC
M	MBTA
(aban.)	ABANDONED UTILITY LINE

CONFORMED SET

SEA CONSULTANTS INC.
Scientists/Engineers/Architects

MWH

Bioengineering GROUP
18 Commercial Street
Salem, MA 01970
T: 978.740.0096
F: 978.740.0097
www.bioengineering.com

COMMONWEALTH OF MASSACHUSETTS MATTHEW DAVID TRAVERS CIVIL No. 45992 REGISTERED PROFESSIONAL ENGINEER 9/8/10

Scale	NONE			
Date	SEPTEMBER 1, 2010			
Job No.	2220331			
Designed by	KMR			
Drawn by	AMF			
Checked by	WCP	No.	Description	Date
Approved by	MDT	REVISIONS		

THE WORKS — CAMBRIDGE DEPARTMENT OF PUBLIC WORKS

CITY OF CAMBRIDGE, MASSACHUSETTS

CAMBRIDGEPARK DRIVE AREA DRAINAGE IMPROVEMENTS
CONTRACT NO. 12

CIVIL
SURVEY LEGEND AND GENERAL NOTES

Sheet No. CG-1

File No.

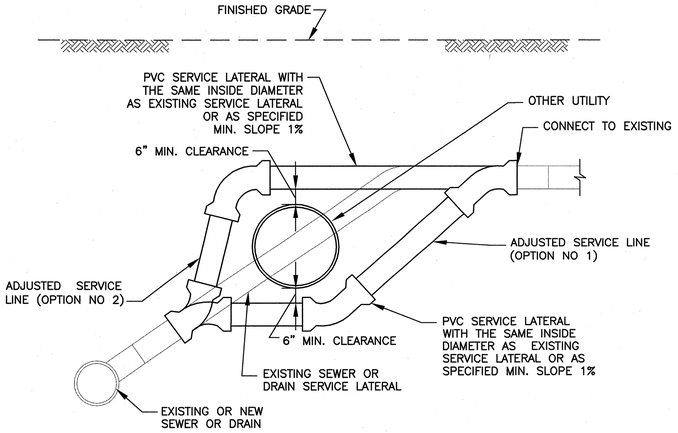

SERVICE LATERAL RECONNECTION FOR CONFLICTS WITH OTHER UTILITY

NOT TO SCALE

NOTES:
1. REFER TO SPEC. SECTION 02500 AND PAVEMENT DETAILS FOR PAVEMENT AND SUB BASE REQUIREMENTS.
2. REFER TO SPEC. SECTION 02210 FOR EXCAVATION, BACKFILL, GRADING, BEDDING AND COMPACTION REQUIREMENTS.
3. FOR USE IN PAYMENT OF ALL ITEMS IN WHICH PAY TRENCH WIDTH IS A VARIABLE FOR THE CALCULATION OF QUANTITIES.
4. BEDDING SHALL BE PER TABLE UNLESS OTHERWISE INDICATED ON PROFILES.
5. FOR EXCAVATION, BEDDING AND BACKFILL IN SILT OR CLAY SOIL SEE SPEC. SECTION 02210.

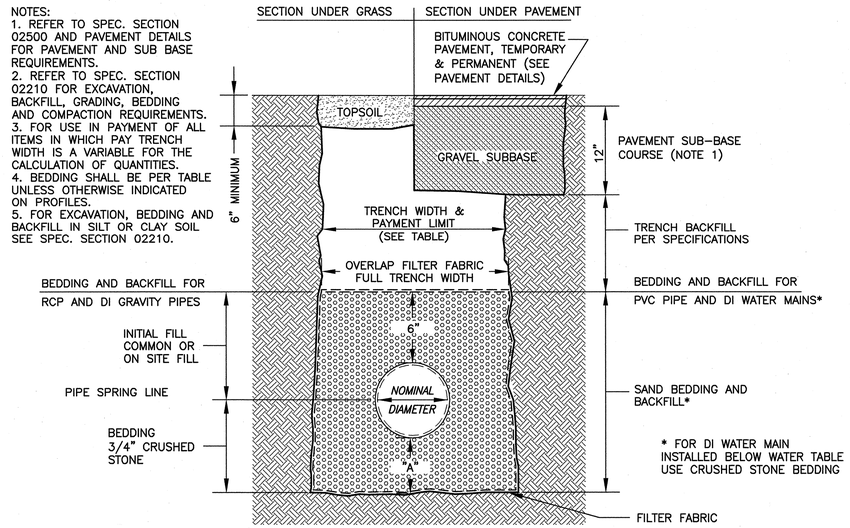

TRENCH PAY LIMIT TABLE FOR PIPES

PIPE SIZE (DIA.)	TRENCH WIDTH	"A"
LESS THAN 2"	2'-0"	6"
2" TO 6"	3'-0"	6"
8" TO 22"	4'-0"	9"
24" & GREATER	I.D. + 2'-0"	12"

I.D. = INSIDE DIMENSION

TRENCH PAY LIMIT TABLE FOR PRECAST STRUCTURES

WALL THICKNESS	TRENCH WIDTH	"A"
LESS THAN 6"	I.D. + 5'-0"	12"
6" TO 12"	I.D. + 6'-0"	12"
13" TO 18"	I.D. + 7'-0"	12"
19" & GREATER	O.D. + 6'-0"	12"

I.D. = INSIDE DIMENSION
O.D. = OUTSIDE DIMENSION

TRENCH DETAIL FOR SEWER, DRAIN AND WATER PIPES

NOT TO SCALE

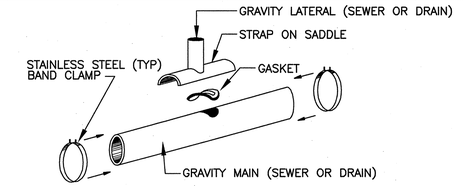

LATERAL STRAP-ON SADDLE

NOT TO SCALE

NOTES:
1. GRAVITY LATERAL (SEWER OR DRAIN) SIZES 4", 6" AND 8"
2. GRAVITY MAINS (SEWER OR DRAIN) SIZES UP TO 94" O.D.
3. ONLY FOR USE CONNECTING TO EXISTING MAINS. CONNECTION TO NEW MAINS SHALL BE MADE WITH FULL BODY FITTING

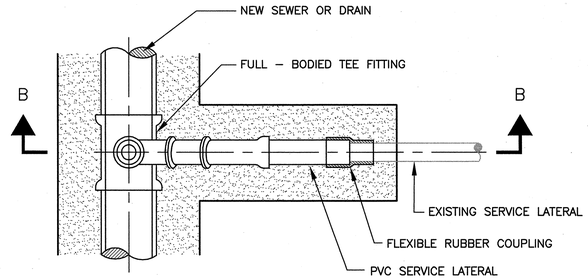

PLAN

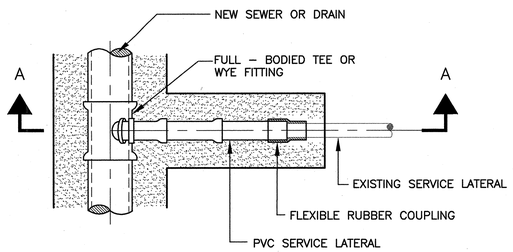

PLAN

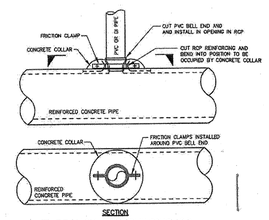

T-BRANCH FOR BUILDING OR CHIMNEY CONNECTION IN RC PIPE (PVC OR DI PIPE BRANCH)

NOT TO SCALE
3-1.2.15 (REV. 08-17-95)

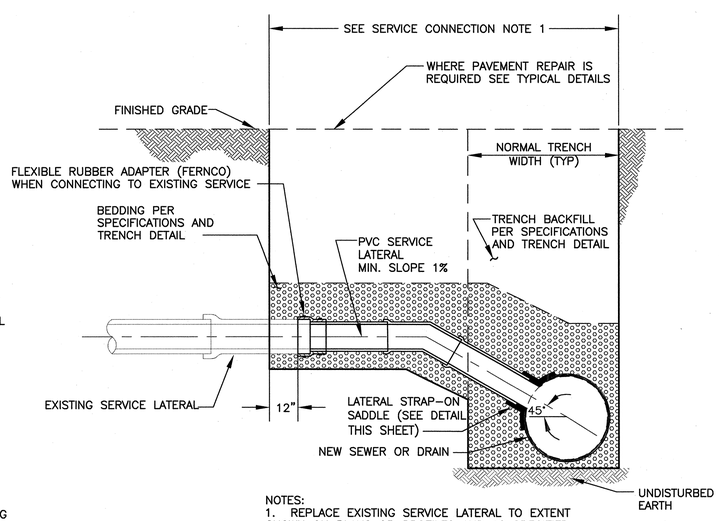

NOTES:
1. REPLACE EXISTING SERVICE LATERAL TO EXTENT SHOWN ON PLANS OR PROFILES AND AS SPECIFIED.
2. EXCAVATE & REMOVE EXISTING LATERAL AS REQUIRED TO ALLOW RECONSTRUCTION.

SECTION A–A
SEWER OR DRAIN SERVICE CONNECTION < 12' DEEP

NOT TO SCALE

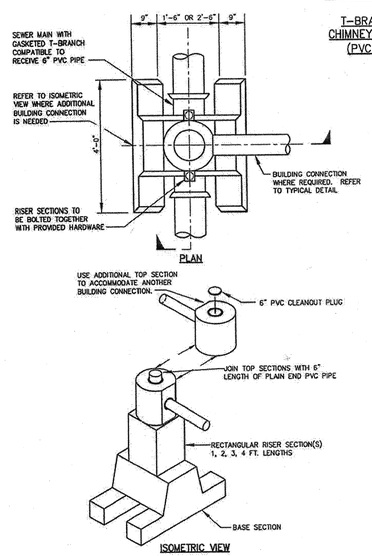

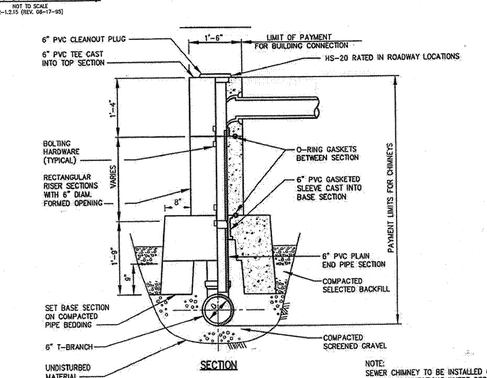

PRECAST REINFORCED CONCRETE SEWER CHIMNEY

NOT TO SCALE
3-1.3 (REV. 03-15-95)

NOTE:
SEWER CHIMNEY TO BE INSTALLED ON BUILDING CONNECTIONS WHERE DEPTH BETWEEN INVERT OF SERVICE CONNECTION AND CROWN OF MAIN SANITARY SEWER IS GREATER THAN 3 VERTICAL FEET.

NOTES:
1. REPLACE EXISTING SERVICE LATERAL TO EXTENT SHOWN ON PLANS OR PROFILES AND AS SPECIFIED.

SERVICE CONNECTION WITH LATERAL STRAP-ON SADDLE

NOT TO SCALE

CONFORMED SET

SEA CONSULTANTS INC.
Scientists/Engineers/Architects

MWH

Bioengineering GROUP
18 Commercial Street
Salem, MA 01970
T: 978.740.0096
F: 978.740.0097
www.bioengineering.com

COMMONWEALTH OF MASSACHUSETTS
MATTHEW DAVID TRAVERS
CIVIL
No. 45962
REGISTERED PROFESSIONAL ENGINEER
9/8/10

Scale	AS NOTED			
Date	SEPTEMBER 1, 2010			
Job No.	2220331			
Designed by	KMR			
Drawn by	AMF			
Checked by	WCP	No.	Description	Date
Approved by	MDT	REVISIONS		

THE WORKS — CAMBRIDGE DEPARTMENT OF PUBLIC WORKS

CITY OF CAMBRIDGE, MASSACHUSETTS
CAMBRIDGEPARK DRIVE AREA DRAINAGE IMPROVEMENTS
CONTRACT NO. 12
CIVIL
TRENCH AND SERVICE CONNECTION DETAILS

Sheet No. CG-2
File No.

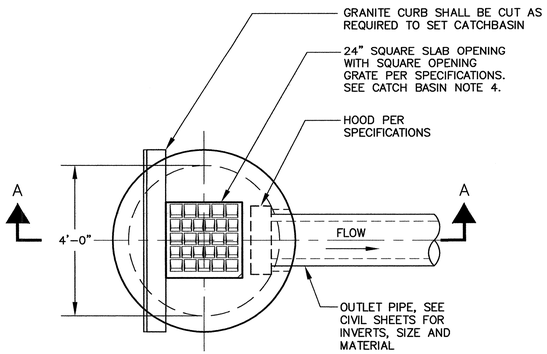

PLAN TYPE-1 (SINGLE GRATE)

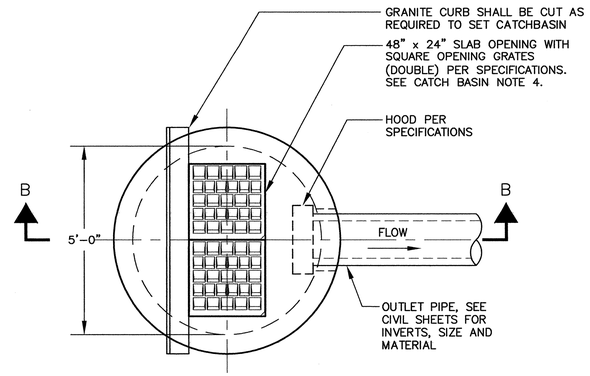

PLAN TYPE-2 (DOUBLE GRATE)

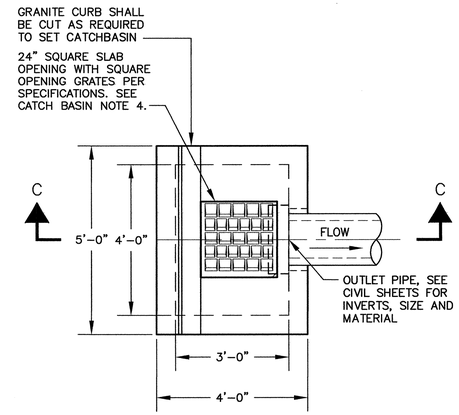

PLAN TYPE-3 (SINGLE GRATE)

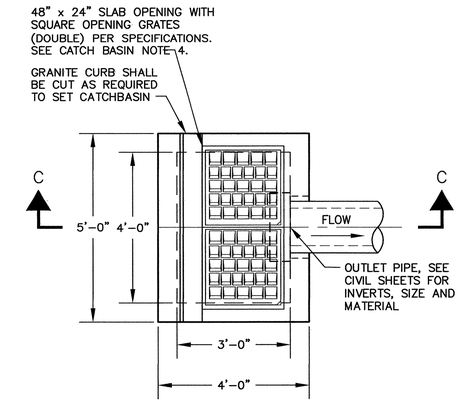

PLAN TYPE-4 (DOUBLE GRATE)

GENERAL CATCH BASIN NOTES:

1. FACE OF PIPE SHALL NOT PROJECT MORE THAN 4-INCHES FROM FACE OF WALL ALONG CENTERLINE OF PIPE.

2. FOR DESCRIPTION OF MATERIALS AND CONSTRUCTION METHOD, SEE SPECIFICATIONS.

3. DESIGN PRECAST SECTIONS WITH FRAME AND GRATE FOR AASHTO H20 LOADING.

4. GRATE OPENING CAN BE CENTERED OR OFFSET PERPENDICULAR TO THE CURB.

5. CATCH BASIN GRATE SHALL BE BY EAST JORDAN IRON WORKS (PRODUCT #00552060) & FRAME TO CORRESPOND.

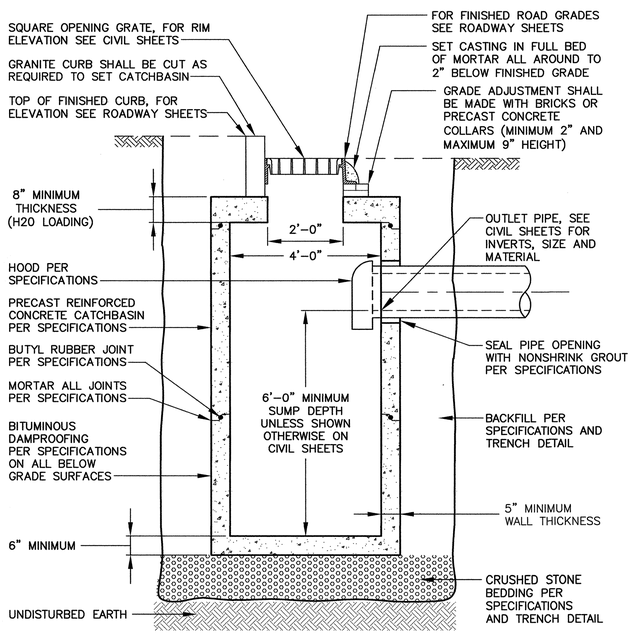

SECTION A-A TYPE-1

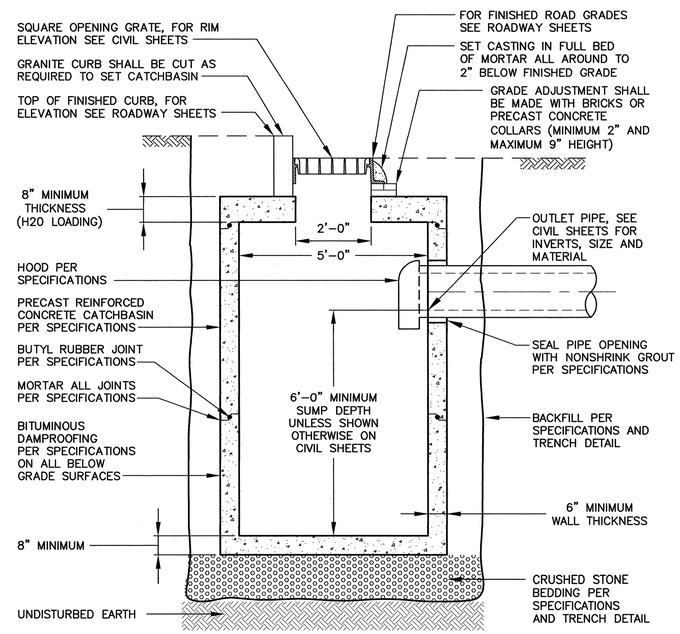

SECTION B-B TYPE-2

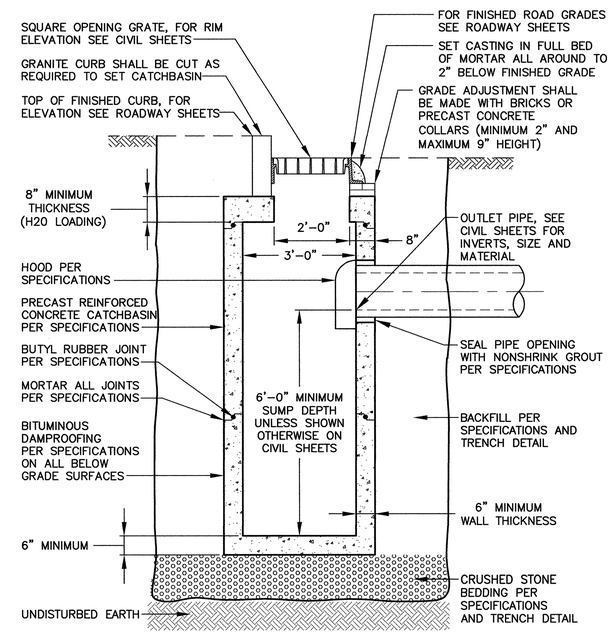

SECTION C-C TYPE-3 AND TYPE-4

CATCHBASIN – TYPE 1 WITH SQUARE OPENING GRATE (SINGLE)

NOT TO SCALE

CATCHBASIN – TYPE 2 WITH SQUARE OPENING GRATES (DOUBLE)

NOT TO SCALE

CATCHBASIN – TYPE 3 WITH (SINGLE) SQUARE OPENING GRATE AND TYPE 4 WITH (DOUBLE) SQUARE OPENING GRATE

NOT TO SCALE

CONFORMED SET

SEA CONSULTANTS INC.
Scientists/Engineers/Architects

MWH

Bioengineering GROUP
18 Commercial Street
Salem, MA 01970
T: 978.740.0096
F: 978.740.0097
www.bioengineering.com

COMMONWEALTH OF MASSACHUSETTS — MATTHEW DAVID TRAVERS — CIVIL — No. 45692 — REGISTERED PROFESSIONAL ENGINEER — 9/9/10

Scale	AS NOTED			
Date	SEPTEMBER 1, 2010			
Job No.	2220331			
Designed by	KMR			
Drawn by	AMF			
Checked by	WCP	No.	Description	Date
Approved by	MDT		REVISIONS	

THE WORKS — CAMBRIDGE DEPARTMENT OF PUBLIC WORKS

CITY OF CAMBRIDGE, MASSACHUSETTS

CAMBRIDGEPARK DRIVE AREA DRAINAGE IMPROVEMENTS
CONTRACT NO. 12

CIVIL
CATCH BASIN DETAILS

Sheet No. CG-3

File No.

NOTES:

1. SPACING BETWEEN PIPES (L) DEPENDS ON PIPE SIZES, FOR PIPES OF THE SAME SIZE USE 4". THE DISTANCE "L" EQUALS THE LARGE PIPE I.D. MINUS THE SMALL PIPE I.D. TIMES TWO [L=(P1–P2)x2].
2. PROPOSED PIPE INVERT SHALL MATCH EXISTING PIPE INVERT UNLESS OTHERWISE SHOWN ON CIVIL SHEETS.
3. SAND BLAST EXISTING PIPE PERIMETER AND APPLY BONDING AGENT PRIOR TO CONCRETE ENCASEMENT.
4. INSTALL HYDROPHILIC (WATER STOP) GASKET ALONG PIPE PERIMETER FOR EACH PIPE AS SPECIFIED.
5. CONCRETE AND REBAR REQUIREMENTS SHALL CONFORM TO SHEET SG–1 AND SPECIFICATIONS.
6. LOCATION OF FIELD CLOSURE SHALL BE SUBJECT TO THE ENGINEER'S APPROVAL.
7. MAINTAIN 2" COVER BETWEEN PIPE AND ALL REINFORCING AND AT ALL CONCRETE SURFACES UNLESS OTHERWISE NOTED.

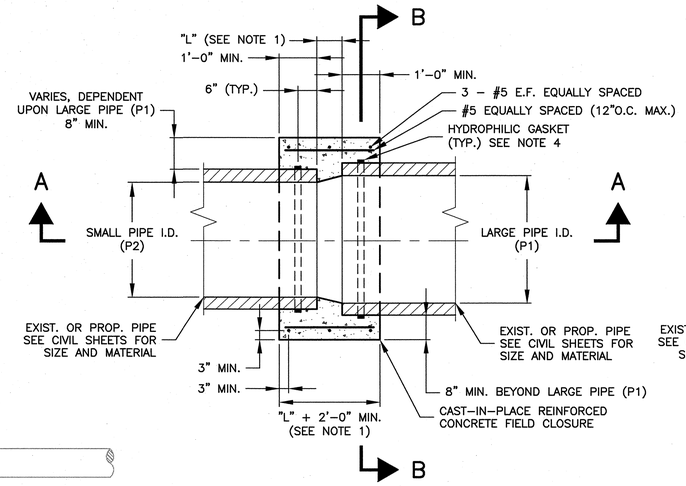

PLAN VIEW

NOT TO SCALE

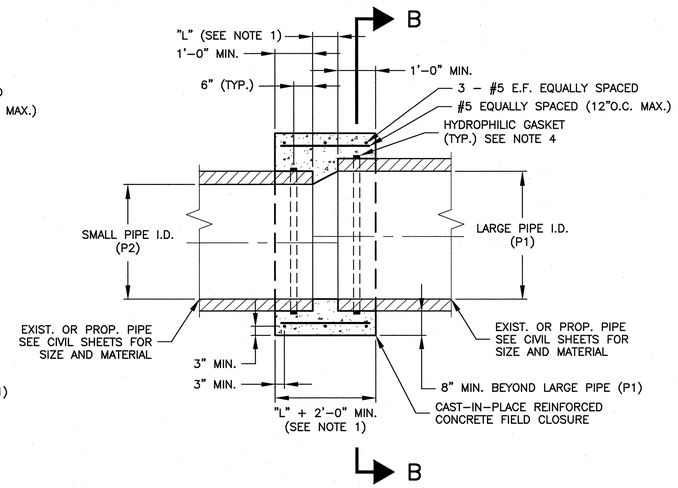

SECTION A–A

NOT TO SCALE

PIPE FIELD CLOSURE (CAST–IN–PLACE) DETAIL – TYPE 1

FOR NON–PRESSURE PIPES OF DIFFERENT MATERIALS OR SIZES

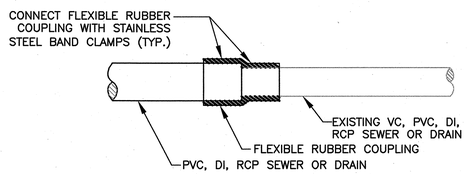

PIPE FIELD ENCLOSURE (FLEXIBLE RUBBER) DETAIL

FOR NON–PRESSURE PIPES OF DIFFERENT MATERIALS OR SIZES

NOTES:
FOR GRAVITY LATERAL PIPES (SEWERS OR DRAINS).
SEE SPECIFICATIONS FOR MATERIALS AND REQUIREMENTS.

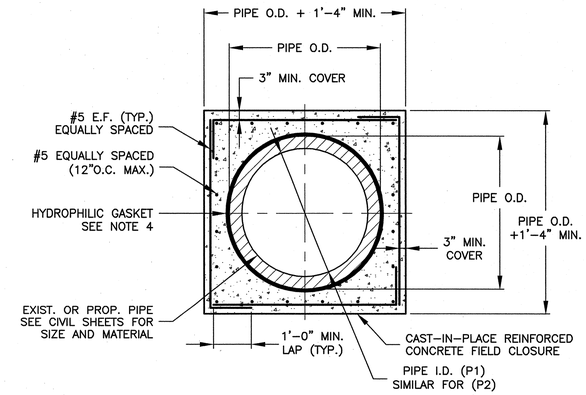

SECTION B–B (P1=48" MAX.)

NOT TO SCALE

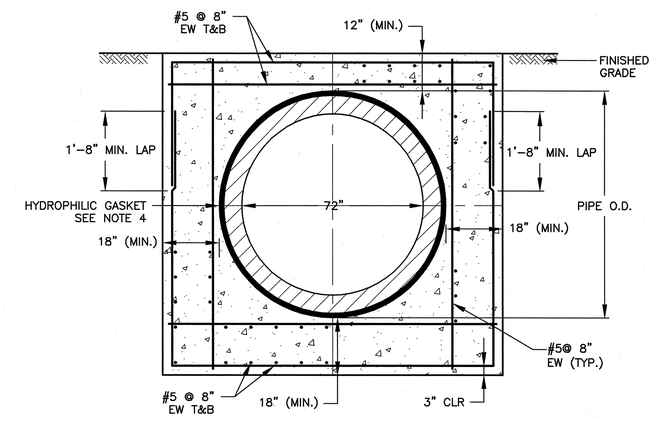

SECTION B–B (P1= 72")

NOT TO SCALE

SEE NOTE 1 FOR LENGTH REQUIREMENT OF CAST–IN–PLACE COLLAR APPLICABLE TO 72"ø PIPE.

PRECAST INLET BOX AND SUMP MANHOLE SIZE TABLE

	PRECAST DIRECT INLET BOX			OUTLET PIPE	SUMP MANHOLE
	WIDTH (I.D.)	LENGTH (I.D.)	DEPTH (I.D.)	ø (I.D.)	ø (I.D.)
SINGLE GRATE	24"	24"	24"	12"	4'
DOUBLE GRATE	24"	48"	24"	15"	5'

I.D. = INSIDE DIMENSION

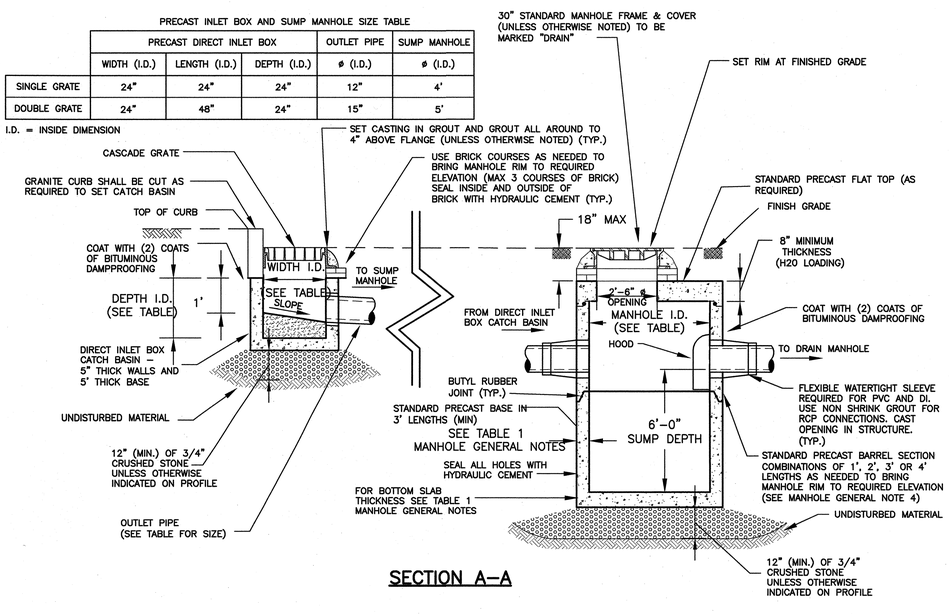

SECTION A–A

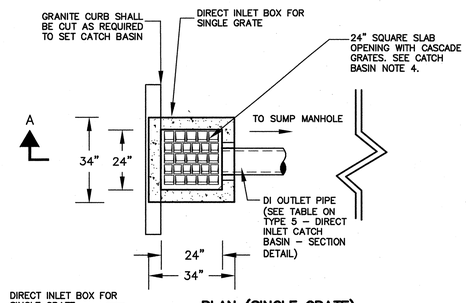

PLAN (SINGLE GRATE)

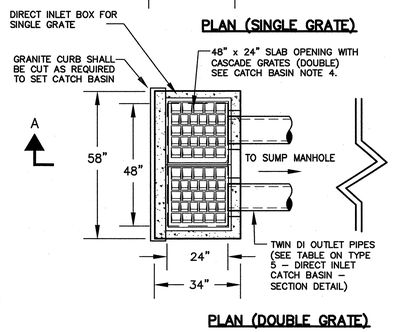

PLAN (DOUBLE GRATE)

CATCH BASIN – TYPE 5 DROP INLET WITH DOUBLE OR SINGLE GRATE

NOT TO SCALE

CONFORMED SET

SEA CONSULTANTS INC.
Scientists/Engineers/Architects

MWH

Bioengineering GROUP
18 Commercial Street
Salem, MA 01970
T: 978.740.0096
F: 978.740.0097
www.bioengineering.com

COMMONWEALTH OF MASSACHUSETTS
MATTHEW DAVID TRAVERS
CIVIL
No. 45992
REGISTERED PROFESSIONAL ENGINEER
9/9/10

Scale	AS NOTED				
Date	SEPTEMBER 1, 2010				
Job No.	2220331				
Designed by	KMR				
Drawn by	AMF				
Checked by	WCP	No.	Description	Date	
Approved by	MDT		REVISIONS		

THE WORKS — CAMBRIDGE DEPARTMENT OF PUBLIC WORKS

CITY OF CAMBRIDGE, MASSACHUSETTS

CAMBRIDGEPARK DRIVE AREA DRAINAGE IMPROVEMENTS
CONTRACT NO. 12

CIVIL
CATCH BASIN AND PIPE CONNECTION DETAILS

Sheet No. CG-4

File No.

TABLE 1 : MANHOLE DIMENSIONS				
MANHOLE DIAMETER	SIDE WALL MIN. THICKNESS	BOTTOM SLAB MIN. THICKNESS	MAX PIPE DIAMETER * RCP	DI/PVC
4'	5"	6"	24"	30"
5'	6"	8"	36"	42"
6'	6"	8"	48"	54"
8'	8"	8"	66"	72"
10'	10"	10"	72"	84"

* MAY VARY DEPENDING ON SIZE AND LOCATION OF ADDITIONAL PENETRATIONS OR RELATIONSHIP OF PENETRATIONS IN MANHOLE

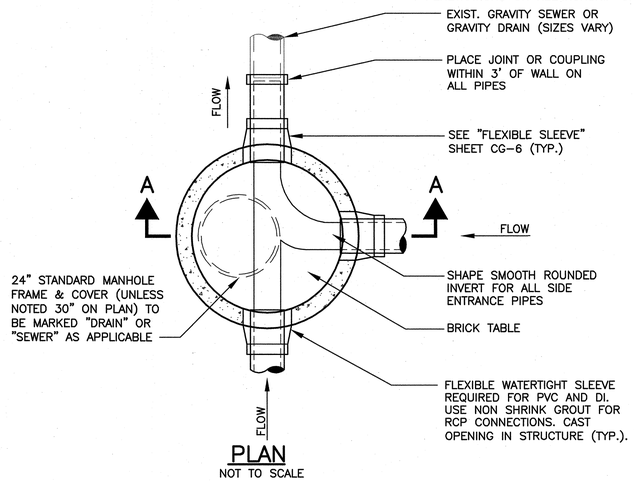

PLAN
NOT TO SCALE

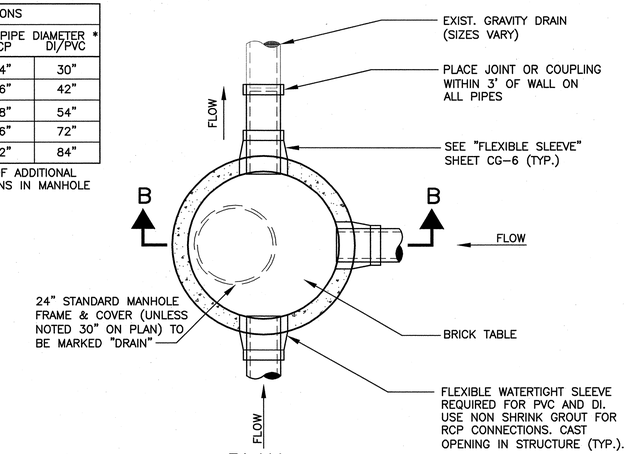

PLAN
NOT TO SCALE

MANHOLE NOTES:

1. INNER EDGE OF BRICK TABLE TO BE AT ELEV OF CROWN OF TOP OF PIPE. TABLE TO SLOPE AT 8.3% TO INSIDE OF MANHOLE BASE.

2. SEWER OR DRAIN MANHOLE DIAMETER SHALL BE 4', 5', 6', OR 8' AS SHOWN ON PLAN/PROFILE VIEWS.

3. DESIGN PRECAST SECTIONS WITH FRAME AND COVER FOR AASHTO H20 LOADINGS.

4. FOR DESCRIPTION OF MATERIALS, SEE SPECIFICATIONS.

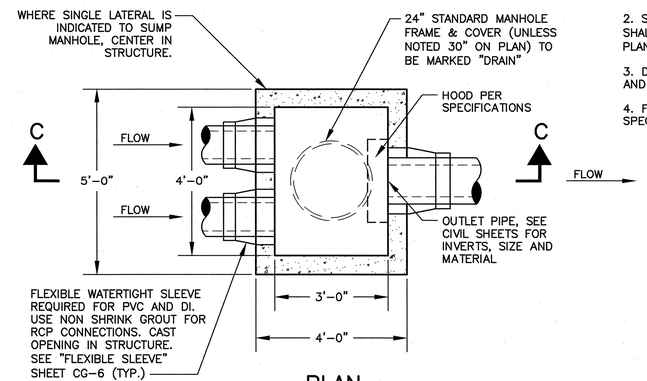

PLAN
NOT TO SCALE

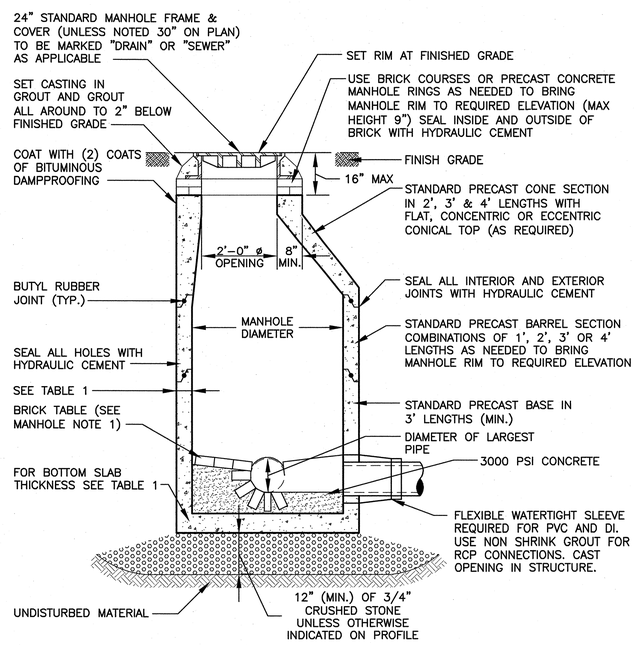

SECTION "A-A"
NOT TO SCALE

MANHOLE DETAIL – TYPE 1
(STANDARD MANHOLE)

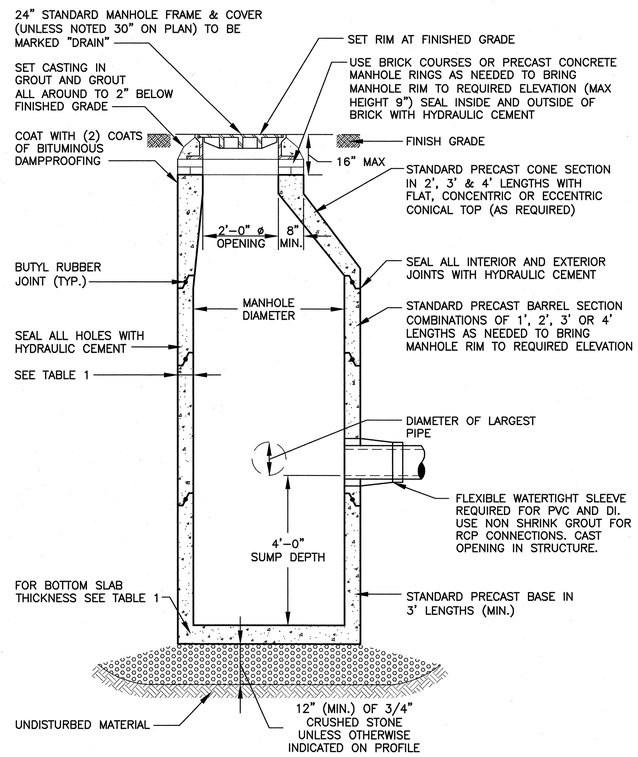

SECTION "B-B"
NOT TO SCALE

MANHOLE DETAIL – TYPE 4
(STANDARD MANHOLE WITH SUMP)

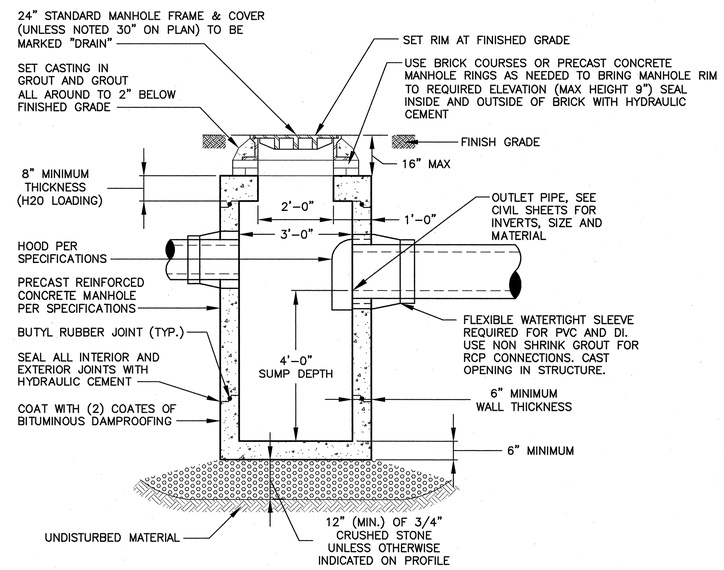

SECTION "C-C"
NOT TO SCALE

MANHOLE DETAIL – TYPE 5
(RECTANGULAR MANHOLE WITH SUMP)

CONFORMED SET

SEA CONSULTANTS INC.
Scientists/Engineers/Architects

MWH

Bioengineering GROUP
18 Commercial Street
Salem, MA 01970
T: 978.740.0096
F: 978.740.0097
www.bioengineering.com

COMMONWEALTH OF MASSACHUSETTS
MATTHEW DAVID TRAVERS
CIVIL
No. 45992
REGISTERED PROFESSIONAL ENGINEER
9/9/10

Scale	AS NOTED			
Date	SEPTEMBER 1, 2010			
Job No.	2220331			
Designed by	KMR			
Drawn by	AMF			
Checked by	WCP	No.	Description	Date
Approved by	MDT	REVISIONS		

THE WORKS
CAMBRIDGE DEPARTMENT OF PUBLIC WORKS

CITY OF CAMBRIDGE, MASSACHUSETTS
CAMBRIDGEPARK DRIVE AREA DRAINAGE IMPROVEMENTS
CONTRACT NO. 12
CIVIL
MANHOLE DETAILS I

Sheet No. CG-5
File No.

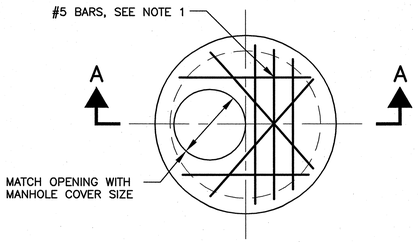

PLAN VIEW

NOT TO SCALE

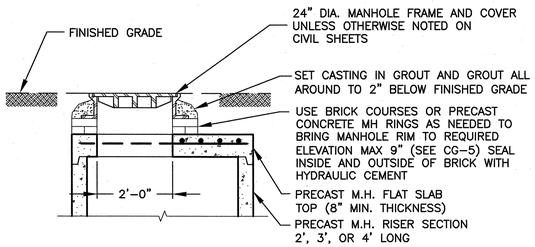

SECTION A–A

NOT TO SCALE

TYPICAL PRECAST (FLAT) TOP SLAB DETAIL

NOTES:

1. DESIGN PRECAST SECTIONS WITH FRAME AND COVER FOR AASHTO H20 LOADINGS.
2. FOR DESCRIPTION OF MATERIALS, SEE SPECIFICATIONS.

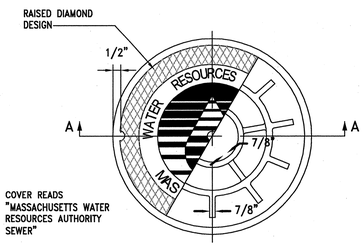

1/2 BOTTOM VIEW

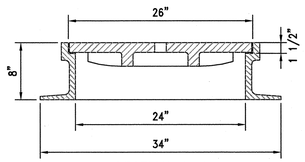

SECTION A–A

26" SEWER MANHOLE FRAME AND COVER

NOT TO SCALE

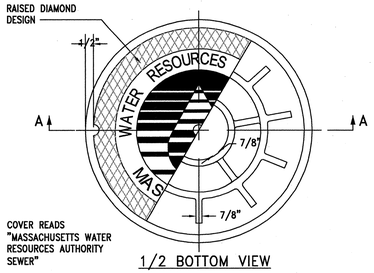

1/2 BOTTOM VIEW

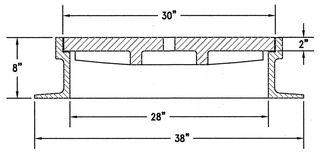

SECTION A–A

30" SEWER MANHOLE FRAME AND COVER

NOT TO SCALE

MWRA MANHOLE FRAME AND COVER DETAILS

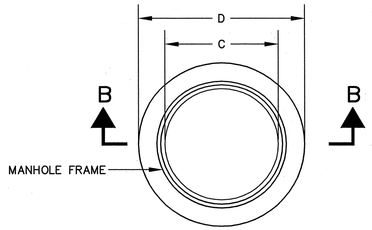

FRAME PLAN

NOT TO SCALE

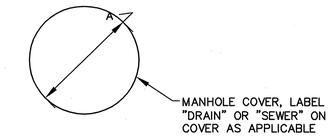

COVER PLAN

NOT TO SCALE

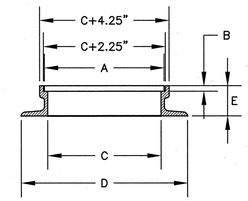

SECTION B–B

NOT TO SCALE

MH FRAME AND COVER DIMENSIONAL RANGE TABLE				
SIZE	24" NOMINAL	30" NOMINAL	30" NOMINAL– LOW PROFILE	30" NOMINAL– BOLT DOWN COVER
A	26"	31 3/4 – 32 1/4"	32 – 34"	32 – 33 3/4"
B	1 1/8 – 1 1/2"	1 1/4 – 1 3/4"	1 3/8 – 2 1/2"	1 1/2 – 1 3/4"
C	23 7/8 – 24"	30"	30 – 30 1/2"	28 1/4 – 30"
D	34 1/8 – 38"	38 – 44"	36 – 41"	40 – 46"
E	8 – 8 1/8"	6 – 8"	4"	7 – 8"

NOTES:

1. DESIGN FRAME AND COVER FOR AASHTO H20 LOADINGS.
2. FOR DESCRIPTION OF MATERIALS, SEE SPECIFICATIONS.

DPW MANHOLE FRAME AND COVER DETAIL

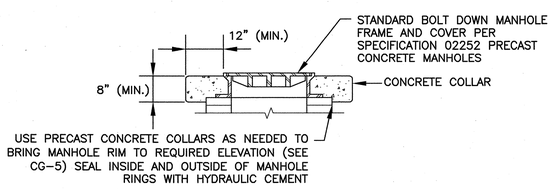

BOLT DOWN COVER WITH REINFORCED COLLAR DETAIL

NOT TO SCALE

NOTES:

1. DESIGN FRAME AND COVER FOR AASHTO H20 LOADINGS.
2. CONCRETE COLLAR SHALL BE DESIGNED TO MEET H20 LOADING.
3. FOR DESCRIPTION OF MATERIALS, SEE SPECIFICATIONS.

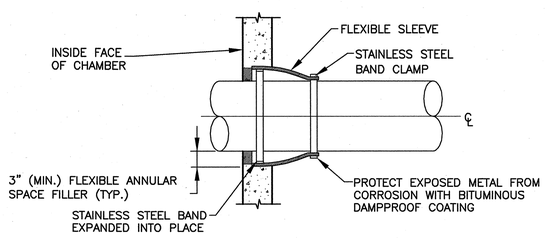

FLEXIBLE SLEEVE CONNECTION DETAIL

NOT TO SCALE

NOTE:

1. PRECAST OPENING OR CORE DRILLED INTO EXISTING STRUCTURE. SIZE VARIES TO ACCOMMODATE EXTENSION BONNET FLANGE DIAMETER OR PIPE.

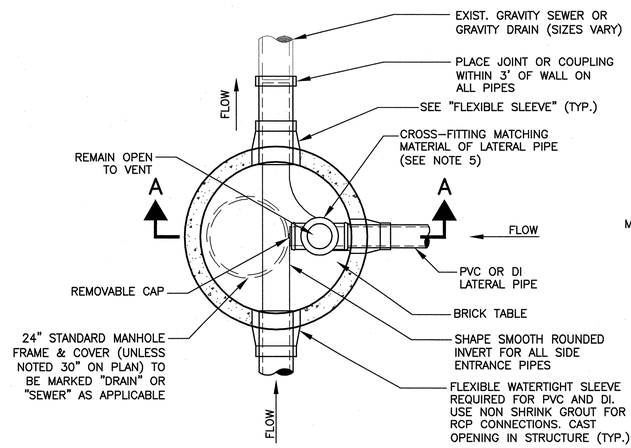

PLAN

NOT TO SCALE

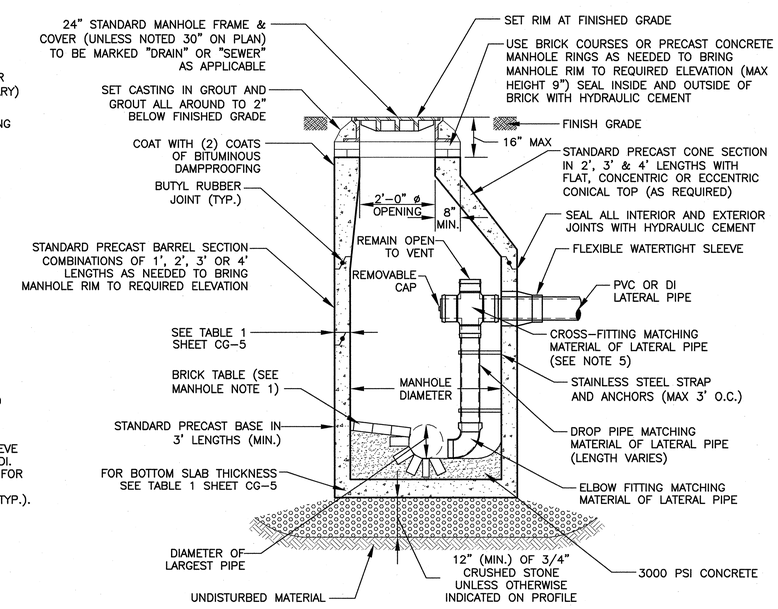

SECTION "A–A"

NOT TO SCALE

MANHOLE NOTES:

1. INNER EDGE OF BRICK TABLE TO BE AT ELEV OF CROWN OF TOP OF PIPE. TABLE TO SLOPE AT 8.3% TO INSIDE OF MANHOLE BASE.
2. SEWER OR DRAIN MANHOLE DIAMETER SHALL BE 4', 5', 6', OR 8' AS SHOWN ON PLAN/PROFILE VIEWS.
3. DESIGN PRECAST SECTIONS WITH FRAME AND COVER FOR AASHTO H20 LOADINGS.
4. FOR DESCRIPTION OF MATERIALS, SEE SPECIFICATIONS.
5. CROSSES SHALL HAVE GASKETED JOINTS. REMOVABLE CAP SHALL BE THREADED OR COMPATIBLE WITH GASKETED JOINTS. FOR CROSSES LARGER THAN 6"ø, AN ECCENTRIC REDUCER MAY BE USED TO CONNECT REMOVABLE CAP. IF THE LATERAL PIPE IS GREATER THAN 8"ø, THE BRANCH AND DROP PIPE CAN BE OF A REDUCED DIAMETER.

INTERIOR DROP MANHOLE DETAIL

NOT TO SCALE

CONFORMED SET

SEA CONSULTANTS INC.
Scientists/Engineers/Architects

MWH

Bioengineering GROUP
18 Commercial Street
Salem, MA 01970
T: 978.740.0096
F: 978.740.0097
www.bioengineering.com

COMMONWEALTH OF MASSACHUSETTS — MATTHEW DAVID TRAVERS — CIVIL — No. 45992 — REGISTERED PROFESSIONAL ENGINEER — 7/8/10

Scale	AS NOTED				
Date	SEPTEMBER 1, 2010				
Job No.	2220331				
Designed by	KMR				
Drawn by	AMF				
Checked by	WCP	No.	Description	Date	
Approved by	MDT		REVISIONS		

THE WORKS — CAMBRIDGE DEPARTMENT OF PUBLIC WORKS

CITY OF CAMBRIDGE, MASSACHUSETTS

CAMBRIDGEPARK DRIVE AREA DRAINAGE IMPROVEMENTS
CONTRACT NO. 12

CIVIL
MANHOLE DETAILS II

Sheet No. CG-6

File No.

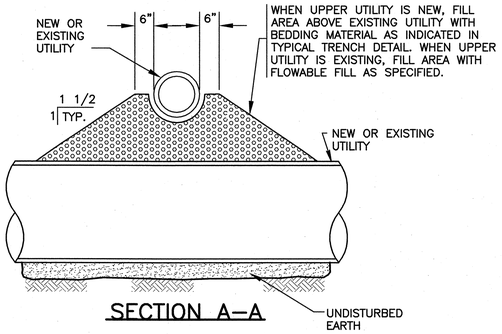

SECTION A–A

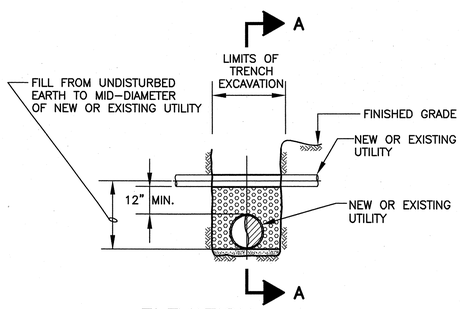

ELEVATION

UTILITY CROSSING

NOT TO SCALE

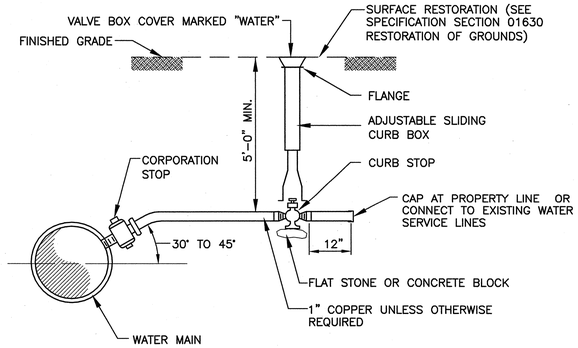

NEW WATER SERVICE DETAIL

NOT TO SCALE

WATER NOTES:

1. ANY WATER MAIN TO BE ENCASED IN CONCRETE FOR STRUCTURAL PURPOSES SHALL BE WITHIN FLOWABLE WILL WITH 0% ASH CONTENT.

2. ALL GATE VALVES SHALL BE RESILIENT SEATED AND "OPEN RIGHT".

3. ALL NEW WATER MAN TO BE WRAPPED IN POLY >/= 9 MIL. THICK (INCLDING TAPPING SLEEVE VALVES, CORPORATIONS, TEES, ETC.)

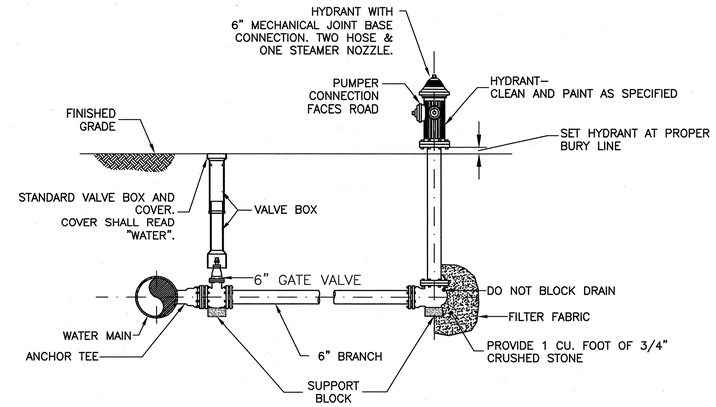

NOTES:
1. PROVIDE HYDRANT AND VALVE JOINTS WITH APPROVED MECHANICAL JOINTS.
2. SUPPORT BLOCKS TO BE PRESSURE TREATED WOOD OR CONCRETE MASONRY BLOCK.
3. ALL VALVES OPEN LEFT.

FIRE HYDRANT DETAIL

NOT TO SCALE

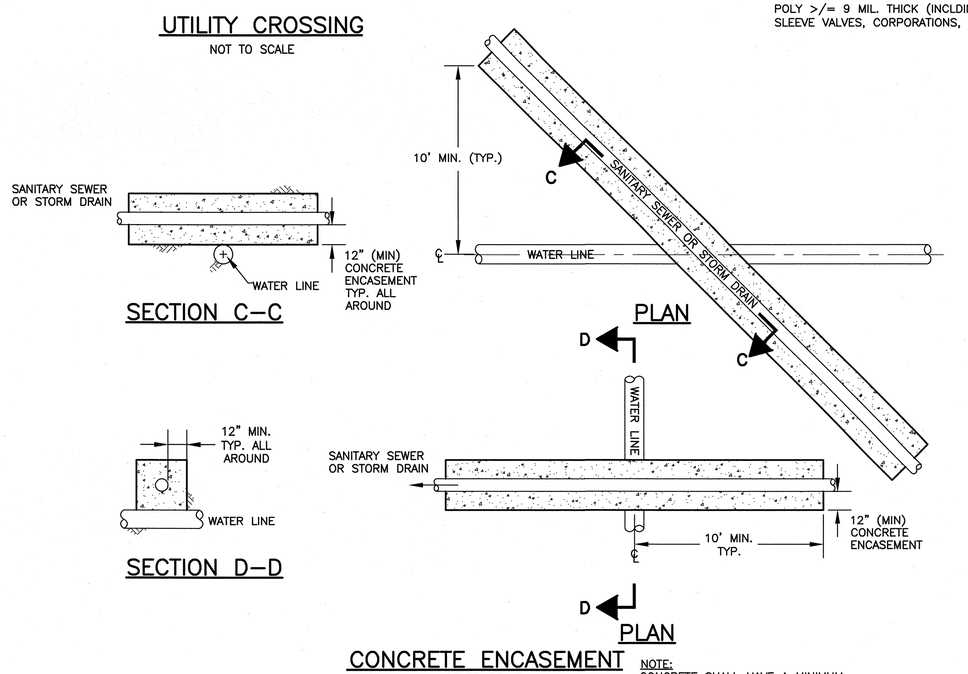

CONCRETE ENCASEMENT

NOT TO SCALE

NOTE:
CONCRETE SHALL HAVE A MINIMUM 3,000 PSI STRENGTH AS INDICATED IN SPECIFICATION SECTION 03300.

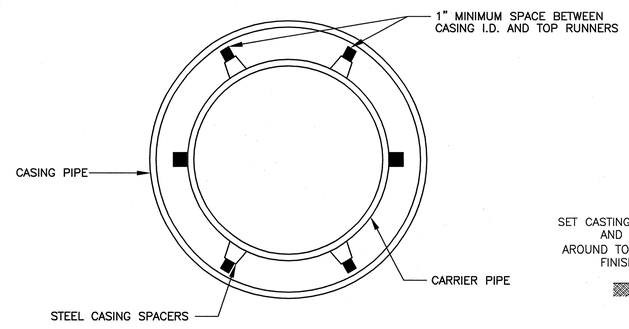

PIPE CASING DETAIL

NOT TO SCALE

NOTE:
1. FOR PIPE CASING WATER MAINS, THE CARRIER PIPES SHALL BE MECHANICALLY BOLTED (I.E. BELLS CUT–OFF).
2. TOP RUNNERS SHALL BE FIBERGLASS OR OTHER MATERIAL APPROVED BY THE ENGINEER

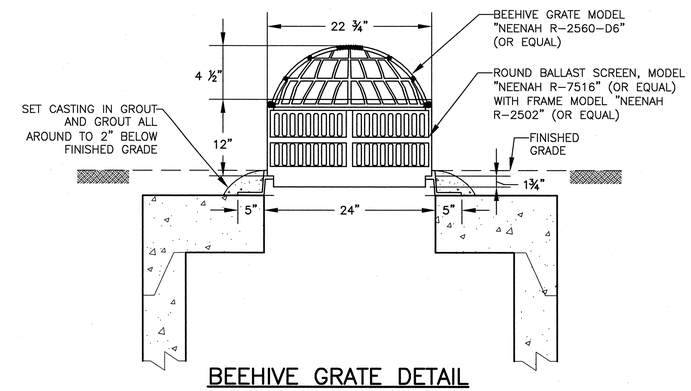

BEEHIVE GRATE DETAIL

NOT TO SCALE

NOTES:
1. SECURE BEEHIVE GRATE TO BALLAST SCREEN USING CONSTRUCTION ZIP TIES

CONFORMED SET

SEA CONSULTANTS INC.
Scientists/Engineers/Architects

MWH

Bioengineering GROUP
18 Commercial Street
Salem, MA 01970
T: 978.740.0096
F: 978.740.0097
www.bioengineering.com

COMMONWEALTH OF MASSACHUSETTS
MATTHEW DAVID TRAVERS
CIVIL
No. 45992
REGISTERED PROFESSIONAL ENGINEER
9/8/10

Scale	AS NOTED			
Date	SEPTEMBER 1, 2010			
Job No.	2220331			
Designed by	KMR			
Drawn by	AMF			
Checked by	WCP	No.	Description	Date
Approved by	MDT	REVISIONS		

THE WORKS
CAMBRIDGE DEPARTMENT OF PUBLIC WORKS

CITY OF CAMBRIDGE, MASSACHUSETTS
CAMBRIDGEPARK DRIVE AREA DRAINAGE IMPROVEMENTS
CONTRACT NO. 12
CIVIL
WATER SERVICE AND THRUST BLOCK DETAILS

Sheet No. CG-7

File No.

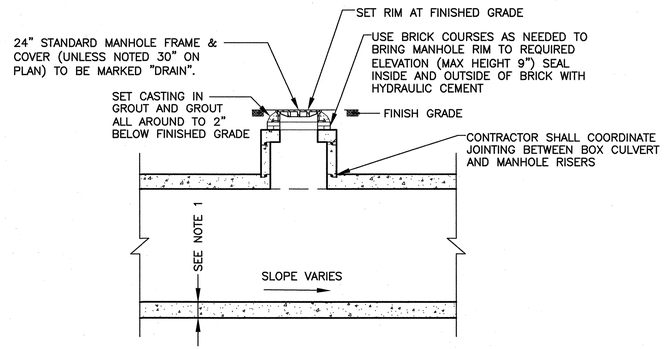

LONGITUDINAL SECTION

NOT TO SCALE

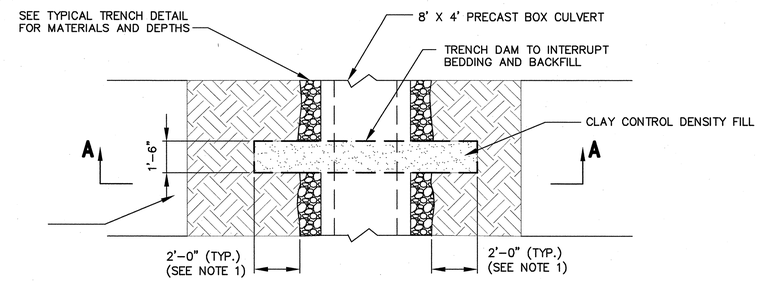

TRENCH DAM (PLAN)

NOT TO SCALE

NOTES:
1. NOTCH TRENCH DAM A MINIMUM OF 2'-0" BEYOND UNDISTURBED MATERIAL ON SIDES AND BOTTOM OF TRENCH.

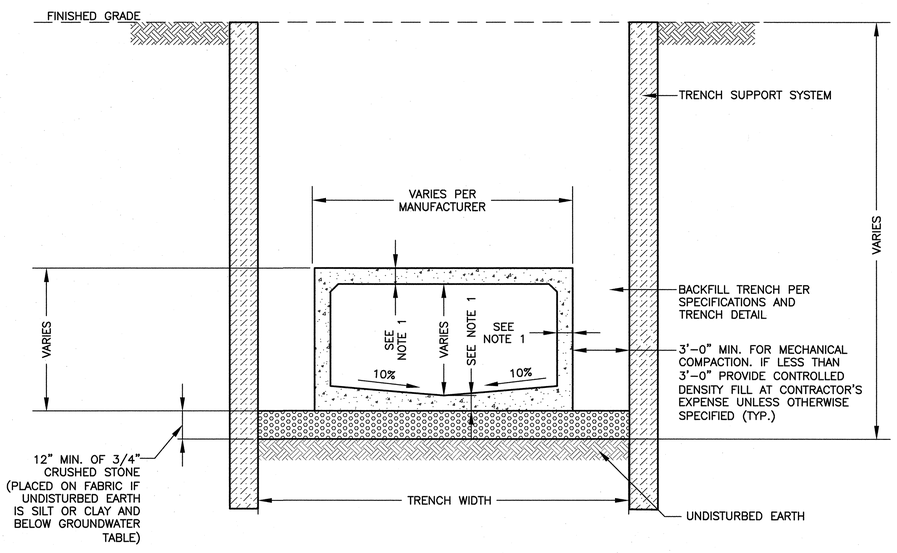

TYPICAL BOX CULVERT DETAIL

NOT TO SCALE

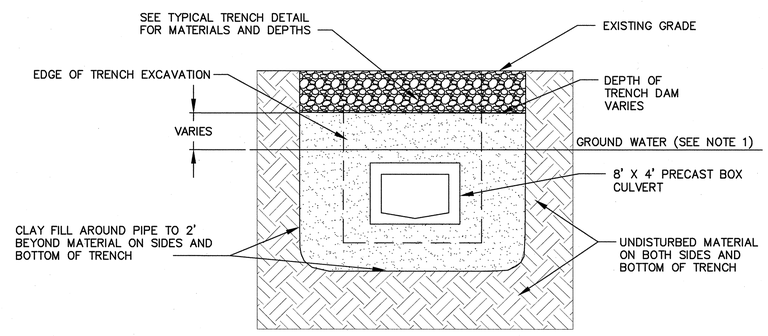

TRENCH DAM (SECTION A–A)

NOT TO SCALE

NOTES:
1. THE TOP OF THE TRENCH DAM SHALL EXTEND A MINIMUM OF 5'-0" ABOVE THE GROUND WATER LEVEL, AS DETERMINED BY THE NEAREST BORING OR BY THE ENGINEER BUT SHALL NOT BE LESS THAN A MINIMUM DEPTH OF 1'-0" BELOW FINISHED GRADE.
2. TRENCH DAMS SHALL BE INSTALLED AS INDICATED ON THE CONTRACT DRAWINGS OR AS DIRECTED BY THE ENGINEER.

NOTE:

1. PRECAST REINFORCED CONCRETE BOX SECTIONS MANUFACTURED IN ACCORDANCE WITH ASTM C789 SPECIFICATIONS SECTION 02715 AND AS SPECIFIED. WATER-TIGHT GASKET JOINTS AS SPECIFIED.

2. SEE SPECIFICATION SECTION 03410 FOR PRECAST CONCRETE REQUIREMENTS.

CONFORMED SET

SEA CONSULTANTS INC.
Scientists/Engineers/Architects

MWH

Bioengineering GROUP
18 Commercial Street
Salem, MA 01970
T: 978.740.0096
F: 978.740.0097
www.bioengineering.com

COMMONWEALTH OF MASSACHUSETTS — MATTHEW DAVID TRAVERS — CIVIL — No. 45992 — REGISTERED PROFESSIONAL ENGINEER — 9/8/10

Scale	AS NOTED
Date	SEPTEMBER 1, 2010
Job No.	2220331
Designed by	KMR
Drawn by	AMF
Checked by	WCP
Approved by	MDT

No.	Description	Date
	REVISIONS	

THE WORKS — CAMBRIDGE DEPARTMENT OF PUBLIC WORKS

CITY OF CAMBRIDGE, MASSACHUSETTS

CAMBRIDGEPARK DRIVE AREA DRAINAGE IMPROVEMENTS
CONTRACT NO. 12

CIVIL
BOX CULVERT DETAILS

Sheet No. CG-8

File No.

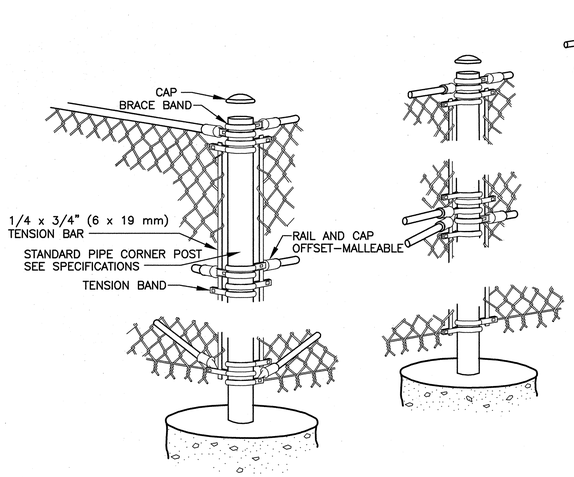

CHAIN LINK FENCE ASSEMBLY

NO SCALE

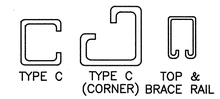

ALTERNATE POSTS

SEE SPECIFICATIONS

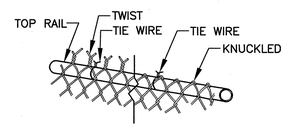

FABRIC SELVAGE

NO SCALE

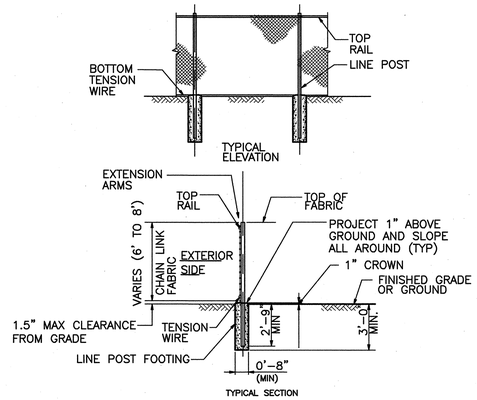

WOVEN WIRE FENCE

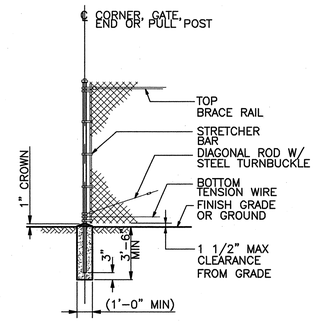

NOTE:
SEE NOTE ON DETAIL 345.

WOVEN WIRE CORNER,
END OR PULL POST

CHAIN LINK FENCE DETAIL

N.T.S.

NOTE:
IN AREAS WHERE INDICATED POST AND FOOTING DEPTH ARE NOT ATTAINABLE DUE TO EXISTING COVER ON BOX CULVERT, INSTALL POST AND FOOTING TO TOP OF BOX CULVERT AND INCREASE FOOTING WIDTH TO 16" FOR STABILITY.

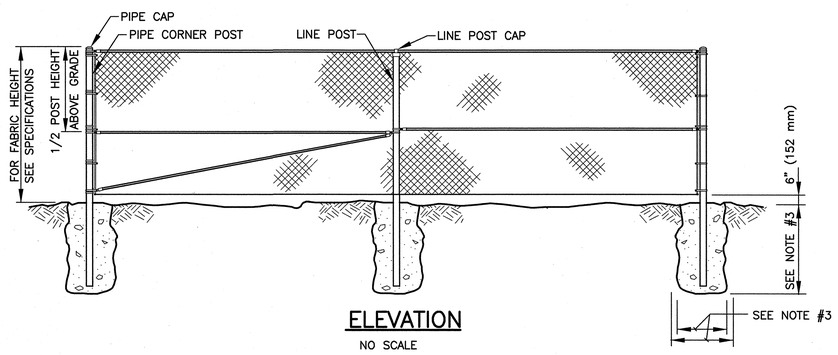

ELEVATION

NO SCALE

NOTES:

1. POST SPACING: LINE POSTS SHALL BE EVENLY SPACED, CENTER TO CENTER.
2. TERMINAL LINE POSTS, & TOP/BRACE RAIL SHALL BE ACCORDING TO THE SPECIFICATIONS.
3. POST SETTING SHALL BE ACCORDING TO THE FOLLOWING TABLE:
4. THE METRIC CONVERSIONS ARE PROVIDED IN PARENTHESIS FOLLOWING THE ENGLISH UNITS.

POST SETTING REQUIREMENT			
TYPE OF POST	HOLE DIA. AT TOP*	HOLE DEPTH	POST EMBEDMENT
LINE	9" (229 mm)	38" (965 mm)	36" (914 mm)
TERMINAL	12" (305 mm)	38" (965 mm)	36" (914 mm)

*MIN. HOLE DIAMETER IN SOFT OR LOOSE SOIL SHALL BE 18" (457 mm).

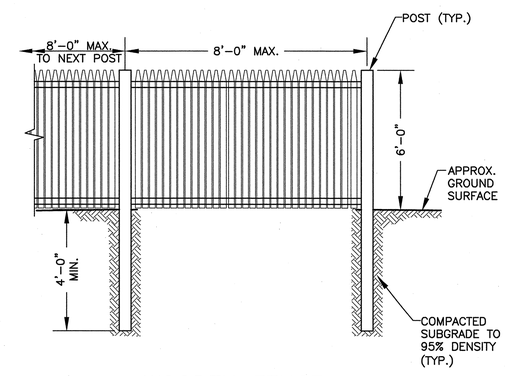

WOODEN FENCE

N.T.S.

NOTE:
1. FENCE SHALL HAVE SURFACE COATED AND/OR TREATED TO MATCH EXIST. CONDITION.

CONFORMED SET

SEA
SEA CONSULTANTS INC.
Scientists/Engineers/Architects

MWH

Bioengineering GROUP
18 Commercial Street
Salem, MA 01970
T: 978.740.0096
F: 978.740.0097
www.bioengineering.com

COMMONWEALTH OF MASSACHUSETTS
MATTHEW DAVID TRAVERS
CIVIL
No. 45992
REGISTERED PROFESSIONAL ENGINEER
9/8/10

Scale	AS NOTED			
Date	SEPTEMBER 1, 2010			
Job No.	2220331			
Designed by	KMR			
Drawn by	AMF			
Checked by	WCP	No.	Description	Date
Approved by	MDT		REVISIONS	

THE WORKS
CAMBRIDGE DEPARTMENT OF PUBLIC

CITY OF CAMBRIDGE, MASSACHUSETTS
CAMBRIDGEPARK DRIVE AREA DRAINAGE IMPROVEMENTS
CONTRACT NO. 12
CIVIL
FENCE AND MISCELLANEOUS DETAILS

Sheet No. CG-9
File No.

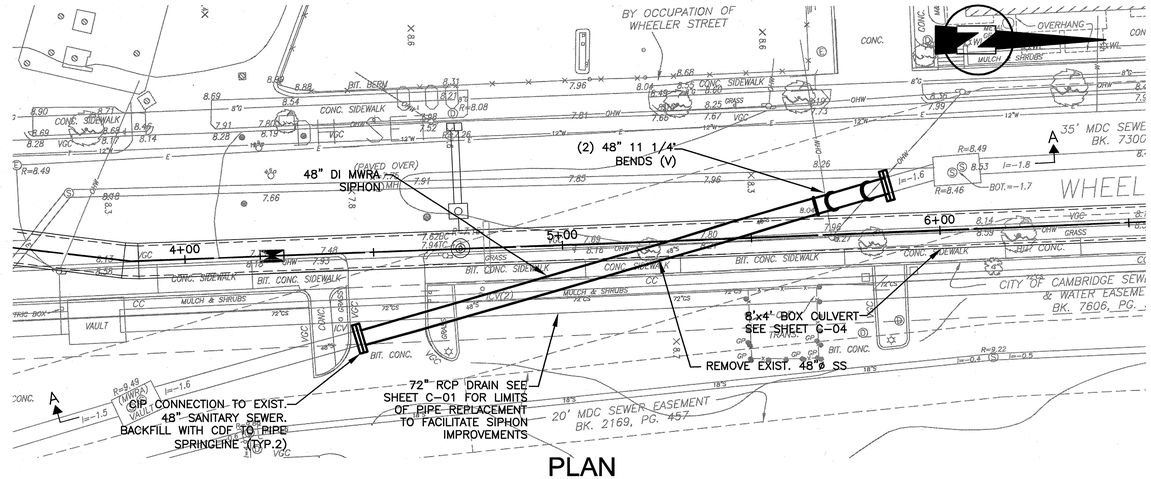

PLAN

SCALE: 1"=20'

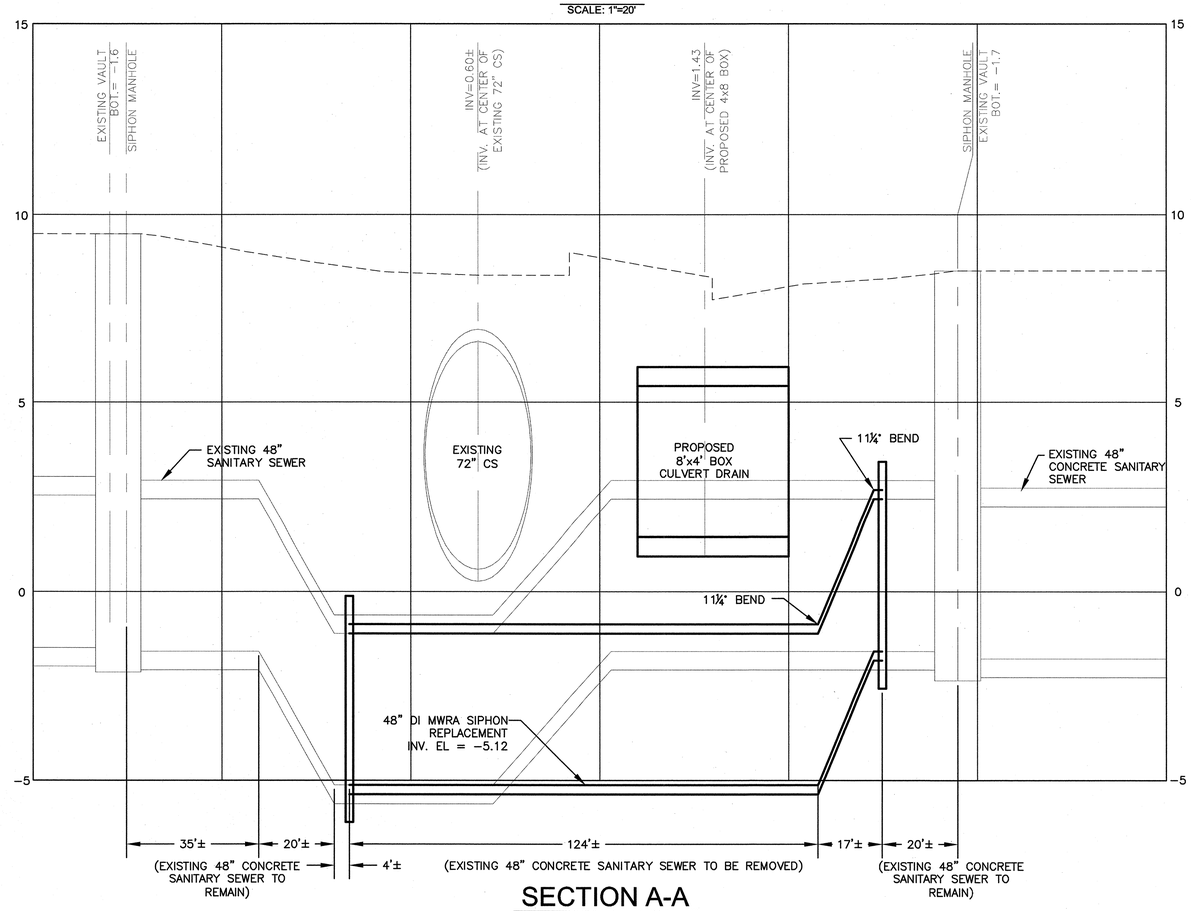

SECTION A-A

HORZ. SCALE: 1"=20'
VERT. SCALE: 1"=2'

HORIZONTAL SCALE: 1"=20'

VERTICAL SCALE: 1"=2'

CONFORMED SET

SEA CONSULTANTS INC.
Scientists/Engineers/Architects

MWH

Bioengineering GROUP
18 Commercial Street
Salem, MA 01970
T: 978.740.0096
F: 978.740.0097
www.bioengineering.com

COMMONWEALTH OF MASSACHUSETTS MATTHEW DAVID TRAVERS CIVIL No. 45992 REGISTERED PROFESSIONAL ENGINEER 9/9/10

Scale	AS NOTED
Date	SEPTEMBER 1, 2010
Job No.	2220331
Designed by	KMR
Drawn by	AMF
Checked by	WCP
Approved by	MDT

No.	Description	Date
	REVISIONS	

THE WORKS — CAMBRIDGE DEPARTMENT OF PUBLIC WORKS

CITY OF CAMBRIDGE, MASSACHUSETTS

CAMBRIDGEPARK DRIVE AREA DRAINAGE IMPROVEMENTS
CONTRACT NO. 12

EXISTING 48 - INCH SANITARY SEWER RELOCATION
PLAN AND PROFILE

Sheet No. CG-10

File No.

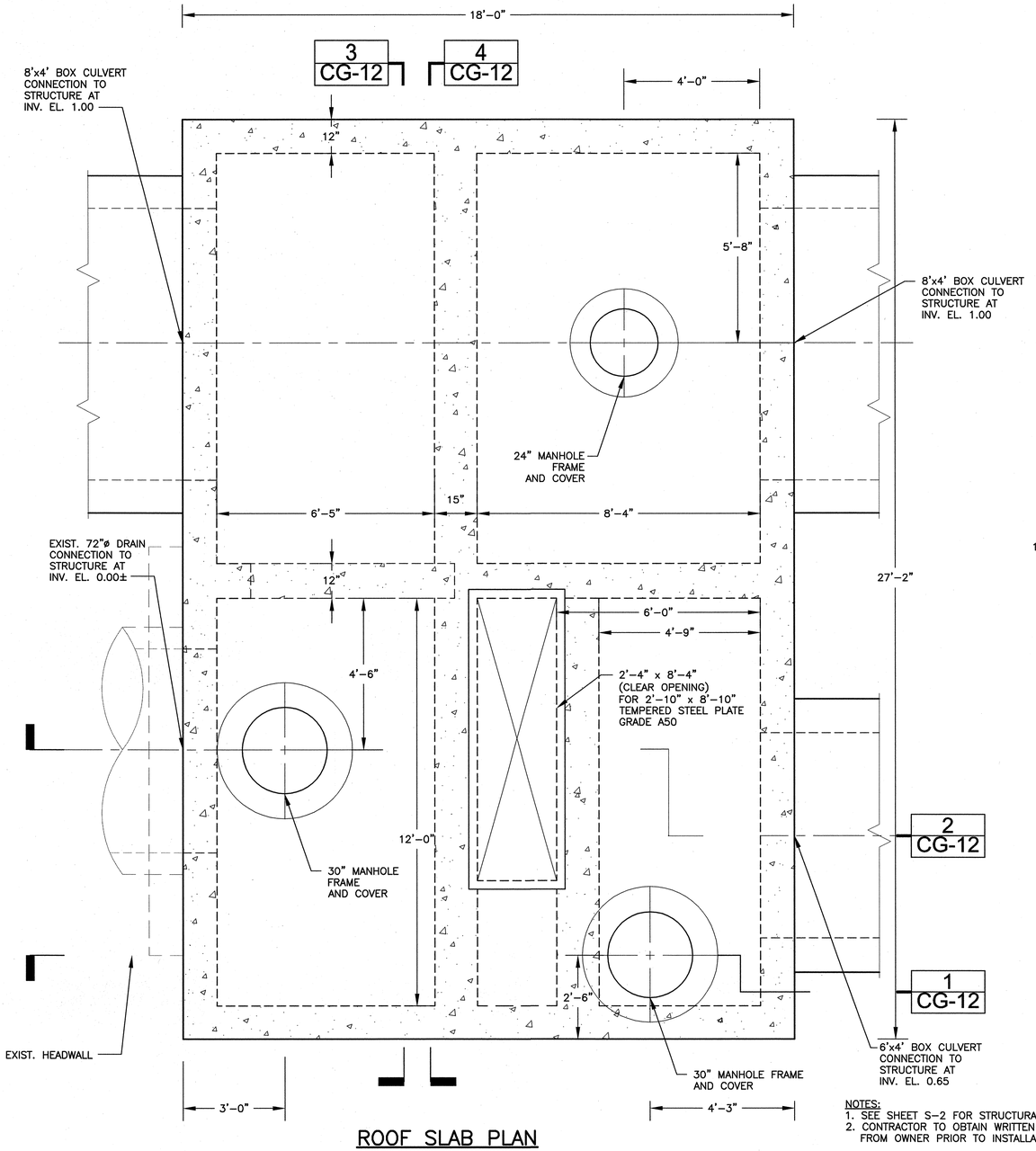

ROOF SLAB PLAN

1/2"=1'-0"

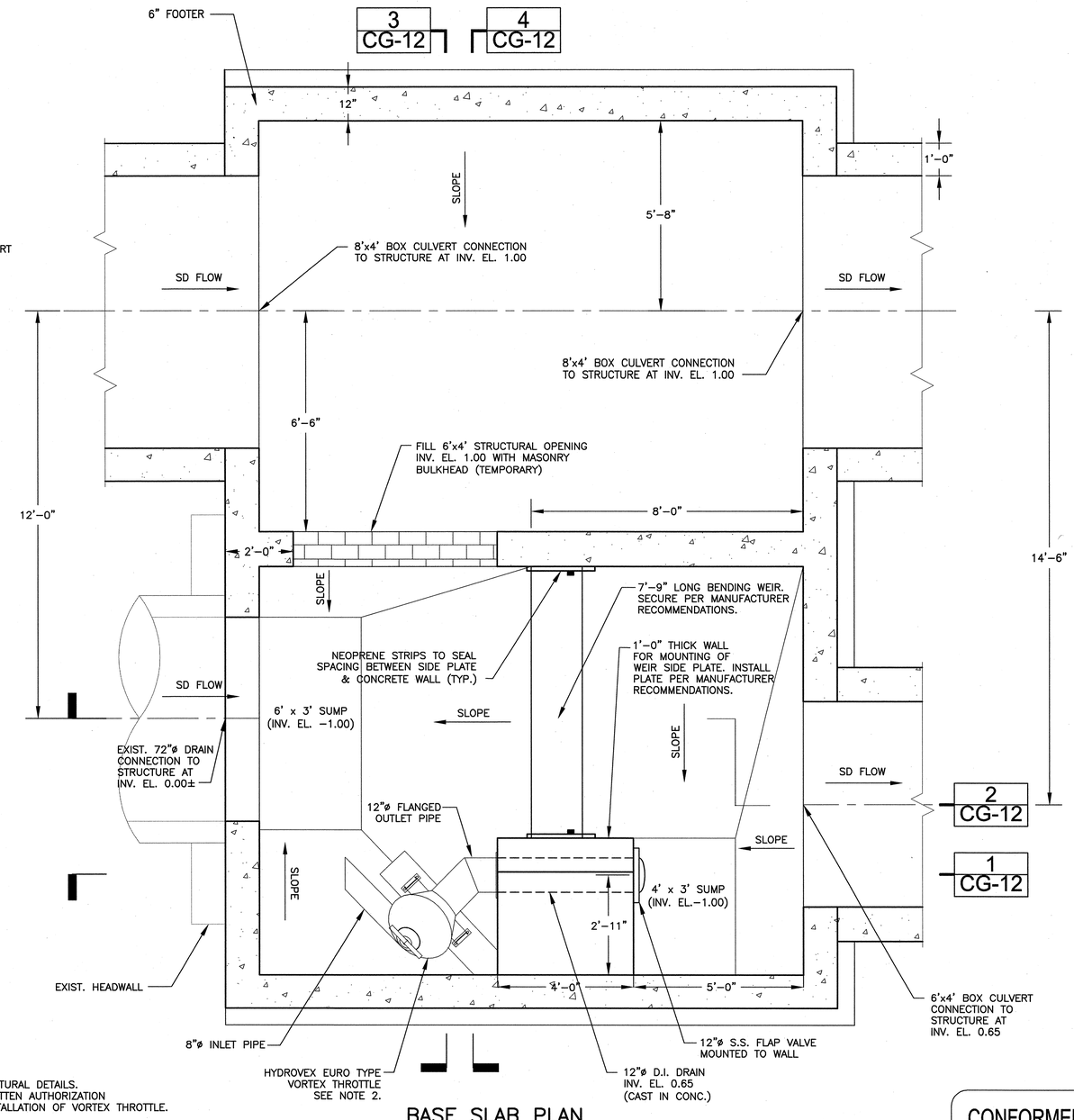

BASE SLAB PLAN

1/2"=1'-0"

NOTES:
1. SEE SHEET S-2 FOR STRUCTURAL DETAILS.
2. CONTRACTOR TO OBTAIN WRITTEN AUTHORIZATION FROM OWNER PRIOR TO INSTALLATION OF VORTEX THROTTLE.

CONFORMED SET

SEA CONSULTANTS INC.
Scientists/Engineers/Architects

MWH

Bioengineering GROUP
18 Commercial Street
Salem, MA 01970
T: 978.740.0096
F: 978.740.0097
www.bioengineering.com

COMMONWEALTH OF MASSACHUSETTS
MATTHEW DAVID TRAVERS
CIVIL
No. 45992
REGISTERED PROFESSIONAL ENGINEER
9/3/10

Scale	AS NOTED
Date	SEPTEMBER 1, 2010
Job No.	2220331
Designed by	KMR
Drawn by	AMF
Checked by	WCP
Approved by	MDT

No.	Description	Date
	REVISIONS	

THE WORKS
CAMBRIDGE DEPARTMENT OF PUBLIC

CITY OF CAMBRIDGE, MASSACHUSETTS
CAMBRIDGEPARK DRIVE AREA DRAINAGE IMPROVEMENTS
CONTRACT NO. 12
WHEELER STREET BENDING WEIR STRUCTURE
PLANS

Sheet No. CG-11
File No.

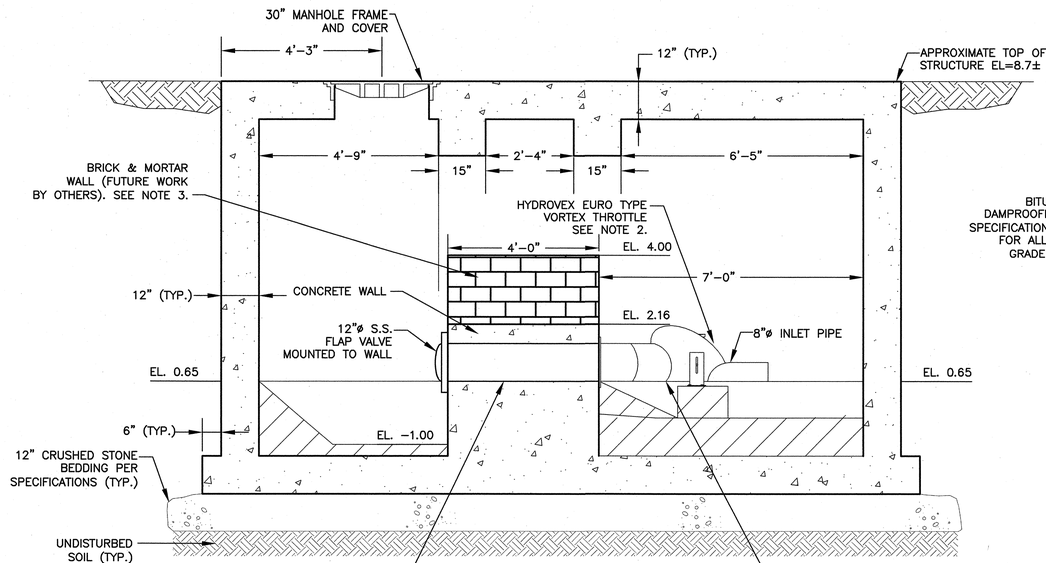

SECTION 1 / CG-11
1/2"=1'-0"

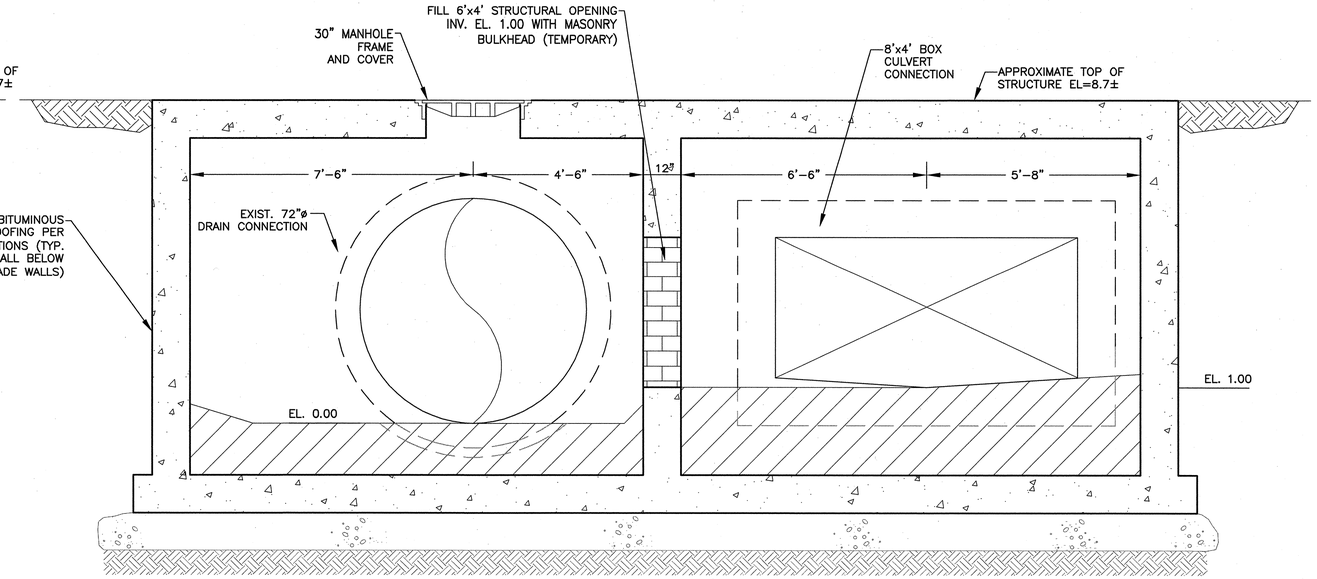

SECTION 3 / CG-11
1/2"=1'-0"

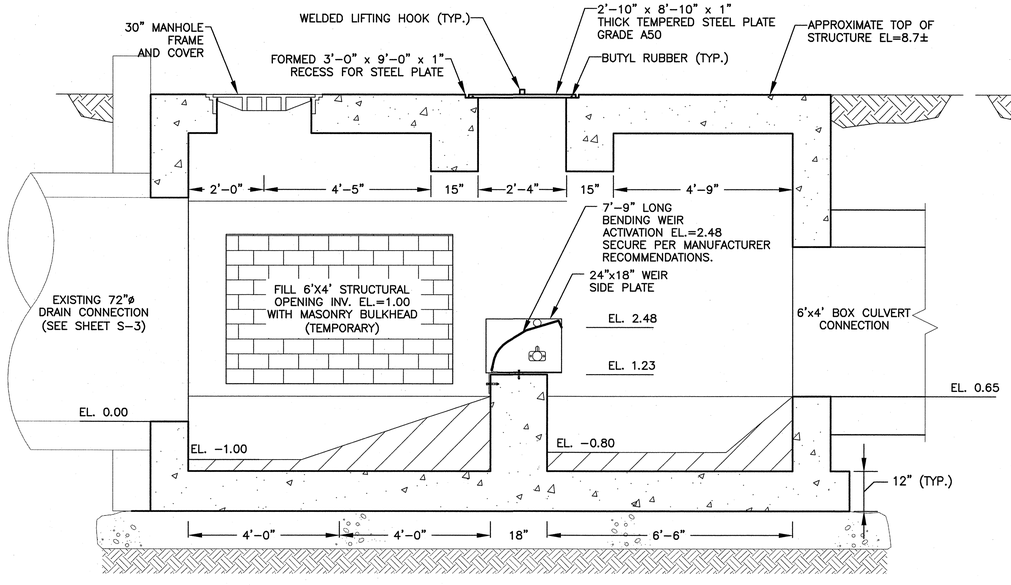

SECTION 2 / CG-11
1/2"=1'-0"

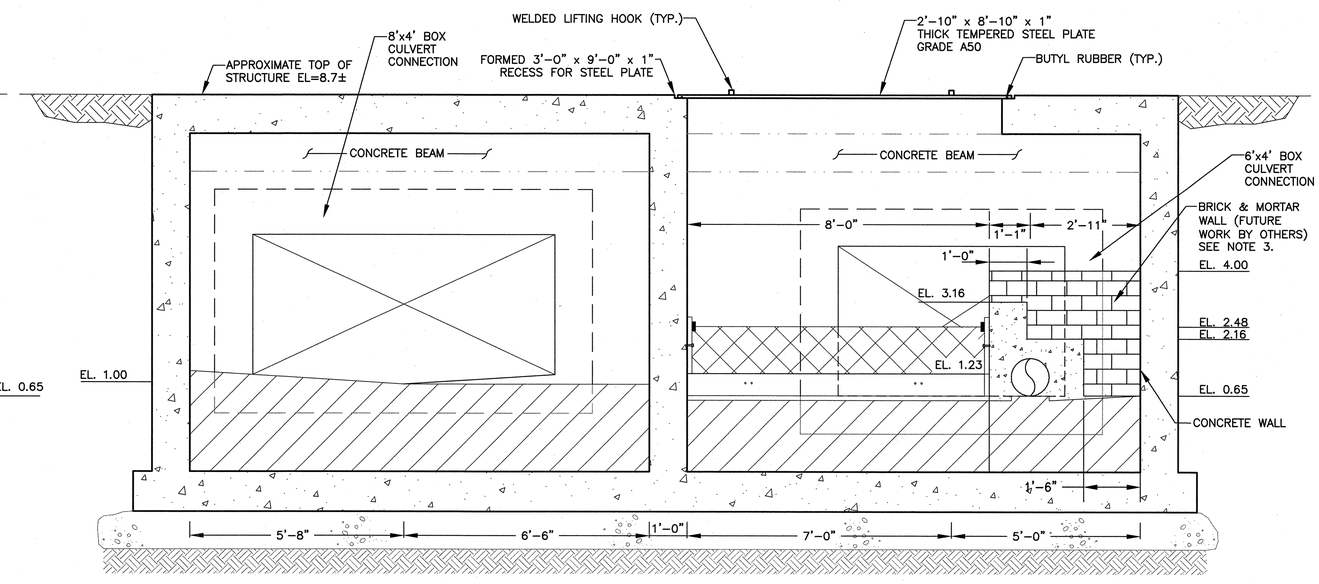

SECTION 4 / CG-11
1/2"=1'-0"

NOTES:
1. SEE SHEETS S-2 AND S-3 FOR STRUCTURAL DETAILS.
2. CONTRACTOR TO OBTAIN WRITTEN AUTHORIZATION FROM OWNER PRIOR TO INSTALLING VORTEX THROTTLE.
3. BRICK AND MORTAR WALL TO BE INSTALLED AFTER COMPLETION OF SEWER SEPARATION UNDER CONTRACTS 8A, 8B, AND 9. FUTURE WORK IS SHOWN HERE FOR REFERENCE ONLY AND SHALL NOT BE CONSTRUCTED UNDER THIS CONTRACT.

CONFORMED SET

SEA CONSULTANTS INC.
Scientists/Engineers/Architects

MWH

Bioengineering GROUP
18 Commercial Street
Salem, MA 01970
T: 978.740.0096
F: 978.740.0097
www.bioengineering.com

COMMONWEALTH OF MASSACHUSETTS — MATTHEW DAVID TRAVERS — CIVIL — No. 45992 — REGISTERED PROFESSIONAL ENGINEER — 10/12/10

Scale	AS NOTED
Date	SEPTEMBER 1, 2010
Job No.	2220331
Designed by	KMR
Drawn by	AMF
Checked by	WCP
Approved by	MDT

No.	Description	Date
	REVISIONS	

THE WORKS — CAMBRIDGE DEPARTMENT OF PUBLIC WORKS

CITY OF CAMBRIDGE, MASSACHUSETTS
CAMBRIDGEPARK DRIVE AREA DRAINAGE IMPROVEMENTS
CONTRACT NO. 12
WHEELER STREET BENDING WEIR STRUCTURE
SECTIONS

Sheet No. CG-12
File No.

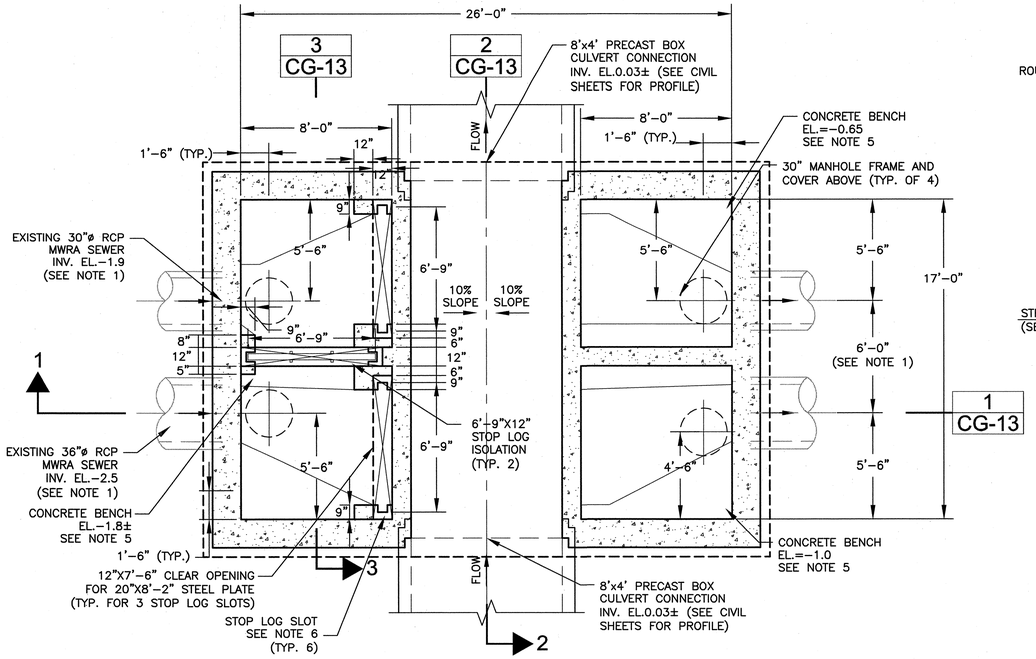

UPPER LEVEL PLAN (BOX CULVERT DRAIN)

SCALE: 1/4"=1'-0"

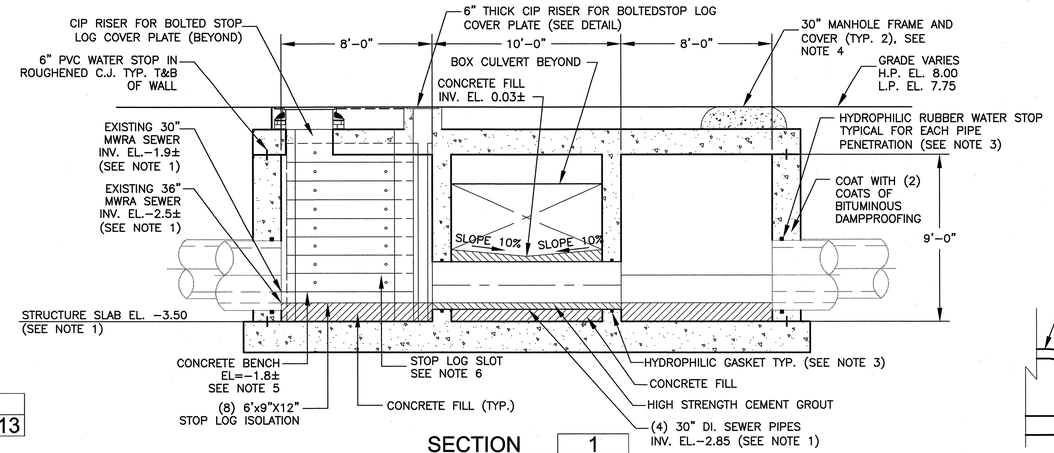

SECTION 1 / CG-13

SCALE: 1/4"=1'-0"

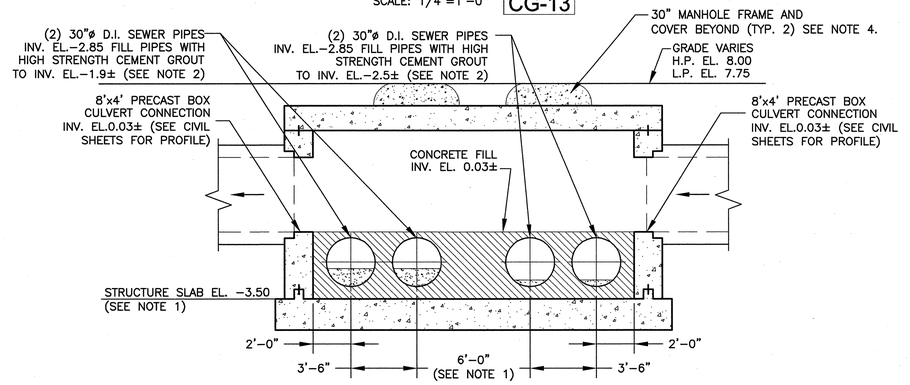

SECTION 2 / CG-13

SCALE: 1/4"=1'-0"

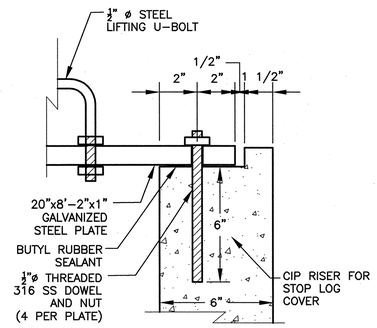

BOLTED STOP LOG COVER DETAIL

SCALE: 1/4"=1"

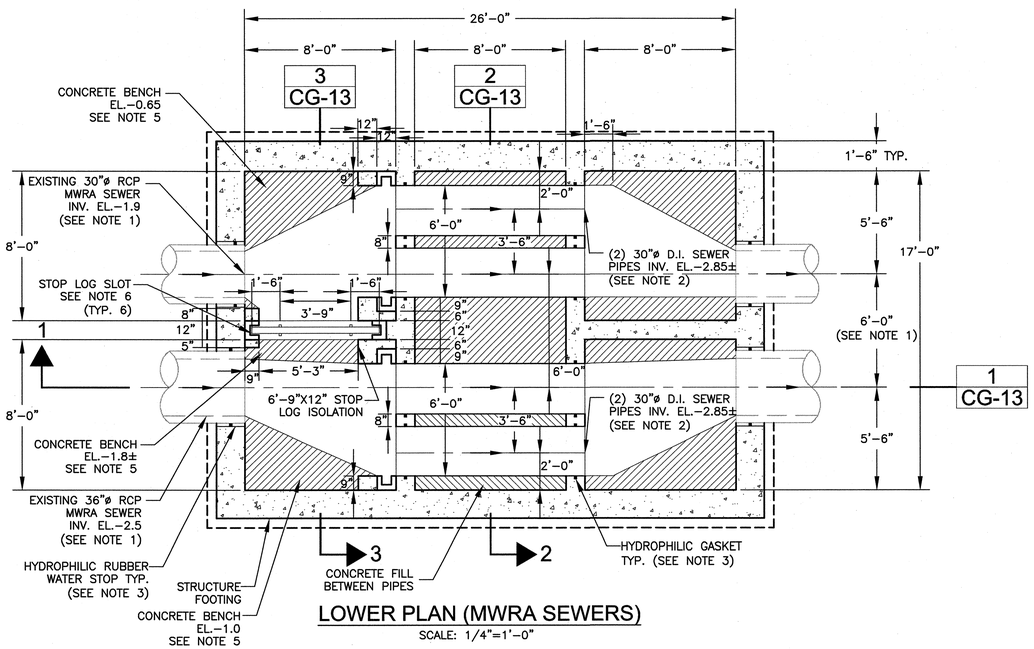

LOWER PLAN (MWRA SEWERS)

SCALE: 1/4"=1'-0"

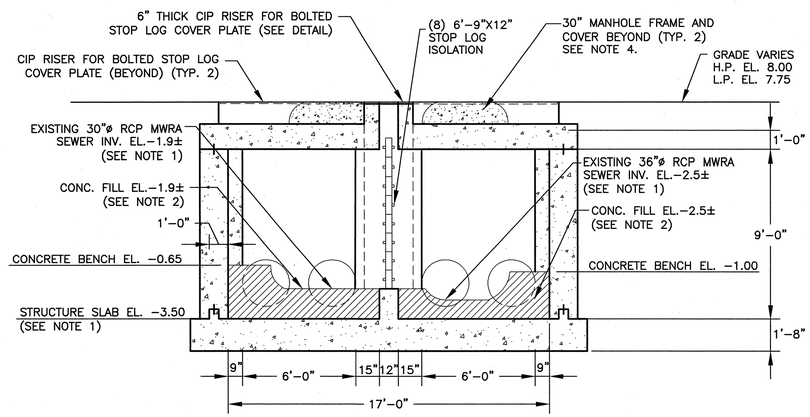

SECTION 3 / CG-13

SCALE: 1/4"=1'-0"

NOTES:

1. BEFORE CONSTRUCTION THE CONTRACTOR SHALL FIELD VERIFY BOTH THE HORIZONTAL AND VERTICAL LOCATIONS OF THE EXISTING 30" AND 36" MWRA SEWER PIPES WITH A TEST PIT. THE CONTRACTOR SHALL NOTIFY THE ENGINEER OF ANY DISCREPANCIES PRIOR TO COMMENCEMENT OF WORK.

2. THE CONTRACTOR SHALL ADJUST THE INVERT ELEVATIONS OF THE HIGH STRENGTH CEMENT GROUT TO MATCH THE INVERT ELEVATION OF THE EXISTING 30" AND 36" MWRA SEWERS TO ALLOW FOR CONTINUOUS GRAVITY FLOW ACROSS THE STRUCTURE.

3. INSTALL HYDROPHILIC (WATER STOP) GASKET AS SPECIFIED ALONG PIPE PERIMETER FOR EACH MWRA PIPE PENETRATION AND EACH END OF THE (4) DUCTILE IRON PIPES.

4. SEE SHEET CG-5 FOR MANHOLE FRAME AND COVER DETAILS.

5. INNER EDGE OF CONCRETE BENCH SHALL BE AT PIPE SPRINGLINE AND SLOPED AT 8.3% TO THE STRUCTURE WALL.

6. CONTRACTOR TO COORDINATE SIZE OF STOP LOG SLOT WITH STOP LOG VENDOR PRIOR TO DESIGNING STRUCTURE'S INTERIOR WALLS.

7. THREE SETS OF STOP LOG SLOTS SHALL BE INSTALLED AS SHOWN, WITH ONLY ONE SET OF STOP LOGS INSTALLED. MWRA TO CONFIGURE STOP LOGS FOR DESIRED FLOW DIVERSION.

8. FOR STRUCTURAL DETAILS SEE SHEETS S-7 AND S-8.

9. DESIGN CAST-IN-PLACE STRUCTURE FOR AASHTO H20 LOADING.

10. PRIOR TO SHOP DRAWING SUBMITTAL, CONTRACTOR TO TEST PIT FOR 30"ø AND 36"ø MWRA SEWERS.

CONFORMED SET

SEA CONSULTANTS INC.
Scientists/Engineers/Architects

MWH

Bioengineering GROUP
18 Commercial Street
Salem, MA 01970
T: 978.740.0096
F: 978.740.0097
www.bioengineering.com

COMMONWEALTH OF MASSACHUSETTS — MATTHEW DAVID TRAVERS — CIVIL — No. 45982 — REGISTERED PROFESSIONAL ENGINEER — 8/8/10

Scale	AS NOTED			
Date	SEPTEMBER 1, 2010			
Job No.	2220331			
Designed by	KMR			
Drawn by	AMF			
Checked by	WCP	No.	Description	Date
Approved by	MDT		REVISIONS	

THE WORKS — CAMBRIDGE DEPARTMENT OF PUBLIC WORKS

CITY OF CAMBRIDGE, MASSACHUSETTS

CAMBRIDGEPARK DRIVE AREA DRAINAGE IMPROVEMENTS
CONTRACT NO. 12

MWRA BELMONT CROSSING STRUCTURE NO.3
PLANS AND SECTIONS

Sheet No. CG-13

File No.

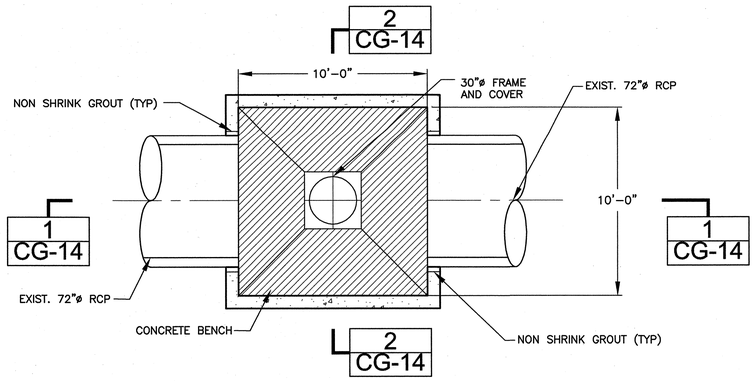

PLAN VIEW

1/4"=1'-0"

NOTES:

1. SEE SHEET C-02.

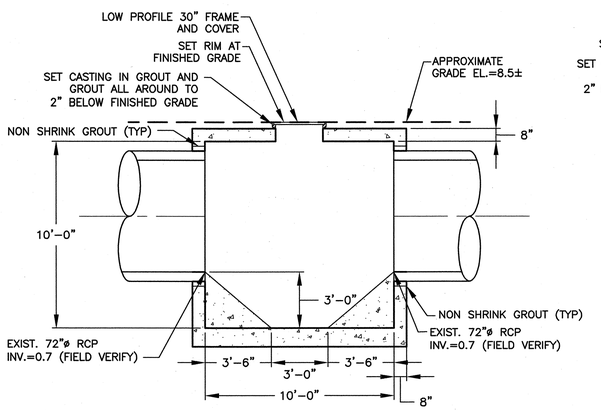

SECTION 1 / CG-14

1/4"=1'-0"

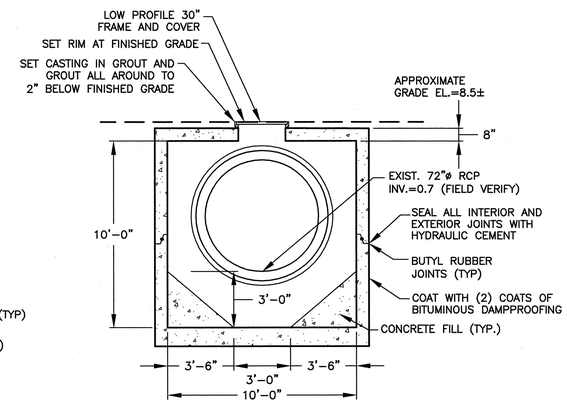

SECTION 2 / CG-14

1/4"=1'-0"

PRECAST GRIT PIT DETAIL

1/4"=1'-0"

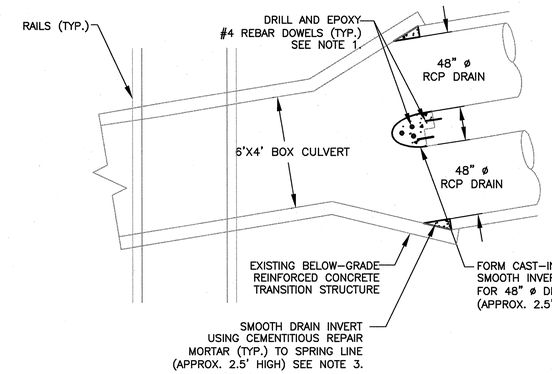

NOTES:

1. SEE STRUCTURAL DETAIL SHEET SG-1 FOR EPOXY AND DOWEL REQUIREMENTS.

2. REBAR SHALL BE DOWELED INTO TRANSITION STRUCTURE WALL AND BOX CULVERT FLOOR AS SHOWN.

3. CEMENTITIOUS REPAIR MORTAR SHALL BE SIKAREPAIR SHB OR EQUAL AND SHALL BE APPLIED IN ACCORDANCE WITH MANUFACTURER'S REQUIREMENTS.

4. SEE SHEET C-03.

AMTRAK BIFURCATION STRUCTURE REPAIR DETAIL

1/4"=1'-0"

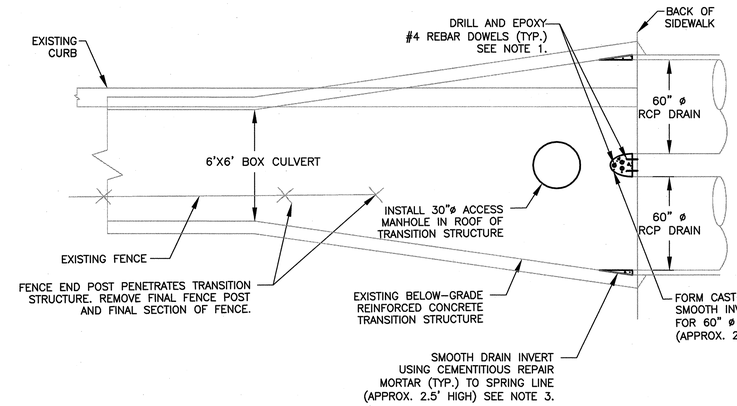

NOTES:

1. SEE STRUCTURAL DETAIL SHEET SG-1 FOR EPOXY AND DOWEL REQUIREMENTS.

2. REBAR SHALL BE DOWELED INTO TRANSITION STRUCTURE WALL AND BOX CULVERT FLOOR AS SHOWN.

3. CEMENTITIOUS REPAIR MORTAR SHALL BE SIKAREPAIR SHB OR EQUAL AND SHALL BE APPLIED IN ACCORDANCE WITH MANUFACTURER'S REQUIREMENTS.

4. SEE SHEET C-13.

CAMBRIDGEPARK DRIVE BIFURCATION STRUCTURE REPAIR DETAIL

1/4"=1'-0"

CONFORMED SET

SEA CONSULTANTS INC.
Scientists/Engineers/Architects

MWH

Bioengineering GROUP
18 Commercial Street
Salem, MA 01970
T: 978.740.0096
F: 978.740.0097
www.bioengineering.com

COMMONWEALTH OF MASSACHUSETTS — MATTHEW DAVID TRAVERS — CIVIL — No. 45992 — REGISTERED PROFESSIONAL ENGINEER — 9/13/10

Scale	AS NOTED
Date	SEPTEMBER 1, 2010
Job No.	2220331
Designed by	KMR
Drawn by	AMF
Checked by	WCP
Approved by	MDT

No.	Description	Date
	REVISIONS	

THE WORKS — CAMBRIDGE DEPARTMENT OF PUBLIC WORKS

CITY OF CAMBRIDGE, MASSACHUSETTS

CAMBRIDGEPARK DRIVE AREA DRAINAGE IMPROVEMENTS
CONTRACT NO. 12

GRIT PIT AND BIFURCATION STRUCTURE DETAILS

Sheet No. CG-14

File No.

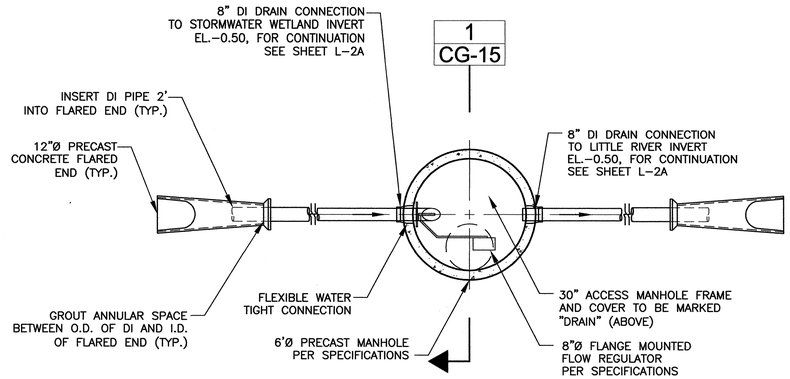

PLAN VIEW

SCALE: 1/4"=1'-0"

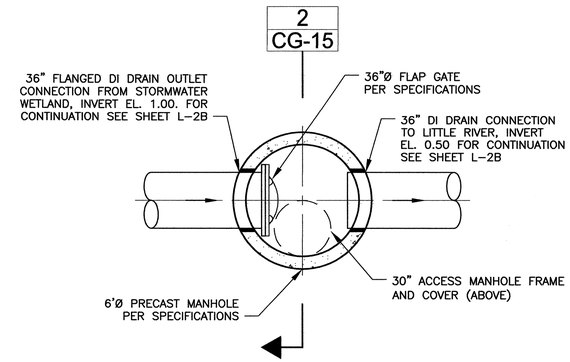

PLAN VIEW

SCALE: 1/4"=1'-0"

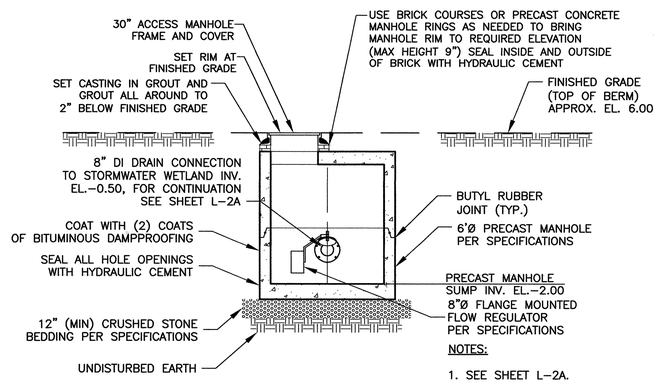

NOTES:

1. SEE SHEET L-2A.

SECTION 1 / CG-15

SCALE: 1/4"=1'-0"

FLOW EQUALIZATION MANHOLE

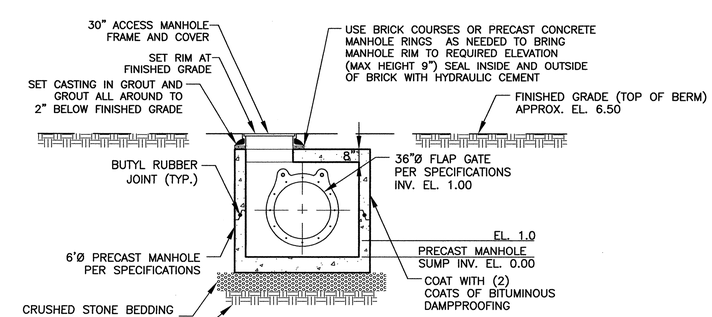

NOTES:

1. SEE SHEET L-2B.

SECTION 2 / CG-15

SCALE: 1/4"=1'-0"

36-INCH FLAP GATE MANHOLE

CONFORMED SET

SEA CONSULTANTS INC.
Scientists/Engineers/Architects

MWH

Bioengineering GROUP
18 Commercial Street
Salem, MA 01970
T: 978.740.0096
F: 978.740.0097
www.bioengineering.com

COMMONWEALTH OF MASSACHUSETTS — MATTHEW DAVID TRAVERS — CIVIL — No. 45992 — REGISTERED PROFESSIONAL ENGINEER — 9/8/10

Scale	AS NOTED
Date	SEPTEMBER 1, 2010
Job No.	2220331
Designed by	KMR
Drawn by	AMF
Checked by	WCP
Approved by	MDT

No.	Description	Date
	REVISIONS	

THE WORKS — CAMBRIDGE DEPARTMENT OF PUBLIC WORKS

CITY OF CAMBRIDGE, MASSACHUSETTS

CAMBRIDGEPARK DRIVE AREA DRAINAGE IMPROVEMENTS
CONTRACT NO. 12

FLOW EQUALIZATION AND FLAP GATE MANHOLE
PLAN AND SECTIONS

Sheet No. CG-15

File No.

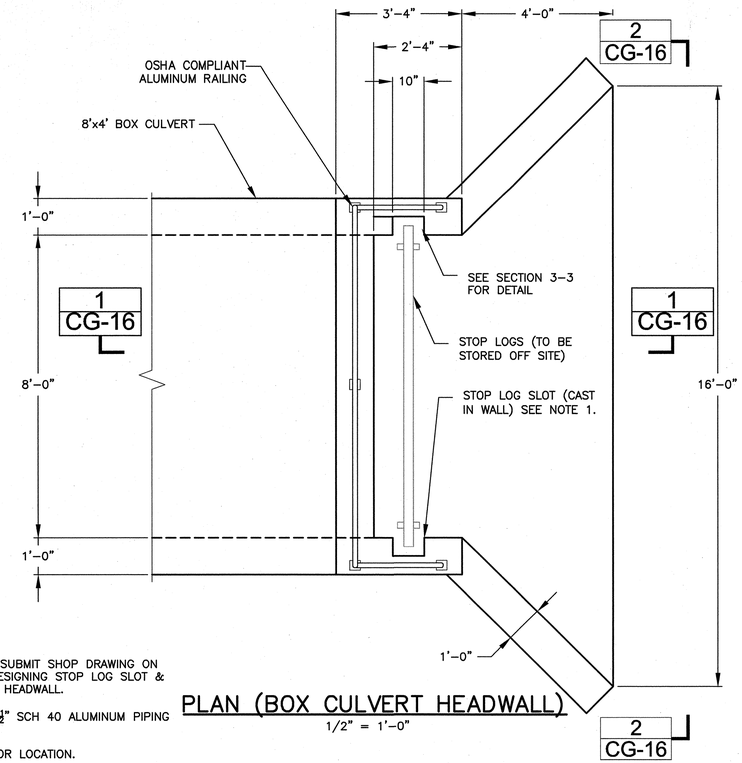

PLAN (BOX CULVERT HEADWALL)
1/2" = 1'-0"

NOTES:

1. CONTRACTOR SHALL SUBMIT SHOP DRAWING ON STOP LOG PRIOR TO DESIGNING STOP LOG SLOT & PRECAST BOX CULVERT HEADWALL.

2. RAILING SHALL BE $1\frac{1}{2}$" SCH 40 ALUMINUM PIPING PER SPECIFICATIONS.

3. SEE SHEET C-10 FOR LOCATION.

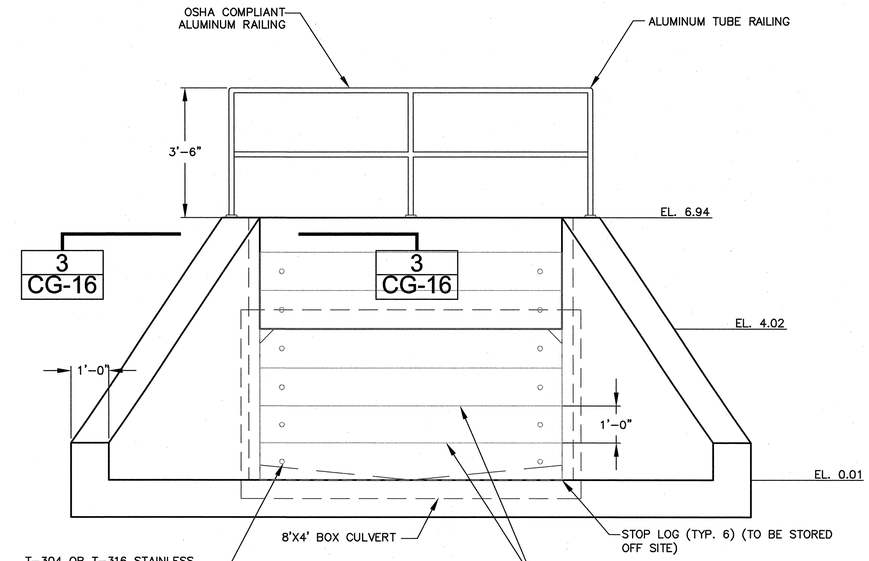

SECTION 2 CG-16
1/2" = 1'-0"

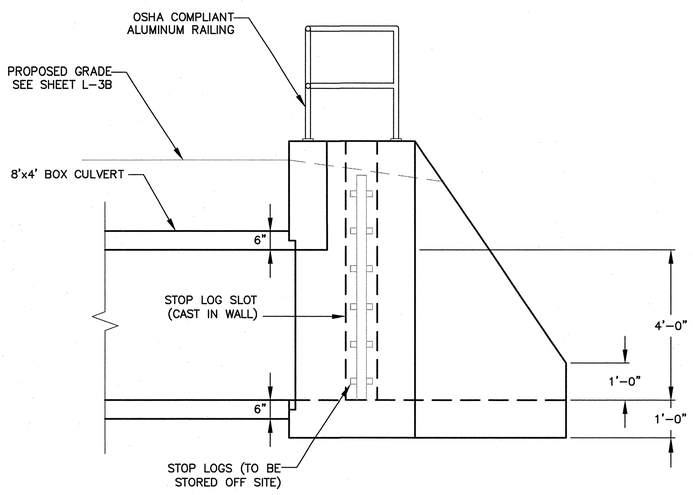

SECTION 1 CG-16
1/2" = 1'-0"

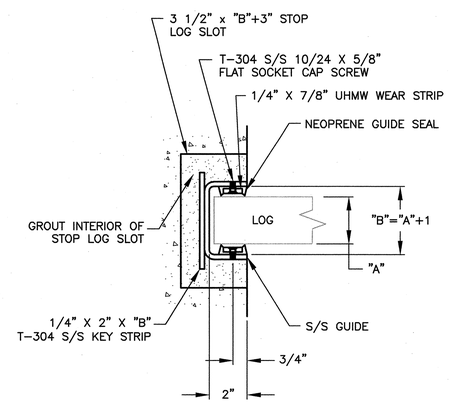

SECTION 3 CG-16
1/2" = 1'-0"

SEE NOTE 1

CONFORMED SET

SEA CONSULTANTS INC.
Scientists/Engineers/Architects

MWH

Bioengineering GROUP
18 Commercial Street
Salem, MA 01970
T: 978.740.0096
F: 978.740.0097
www.bioengineering.com

COMMONWEALTH OF MASSACHUSETTS
MATTHEW DAVID TRAVERS
CIVIL
No. 45992
REGISTERED PROFESSIONAL ENGINEER
9/9/10

Scale	AS NOTED			
Date	SEPTEMBER 1, 2010			
Job No.	2220331			
Designed by	KMR			
Drawn by	AMF			
Checked by	WCP	No.	Description	Date
Approved by	MDT		REVISIONS	

THE WORKS — CAMBRIDGE DEPARTMENT OF PUBLIC WORKS

CITY OF CAMBRIDGE, MASSACHUSETTS
CAMBRIDGEPARK DRIVE AREA DRAINAGE IMPROVEMENTS
CONTRACT NO. 12
BOX CULVERT HEADWALL
PLAN AND SECTIONS

Sheet No. CG-16
File No.

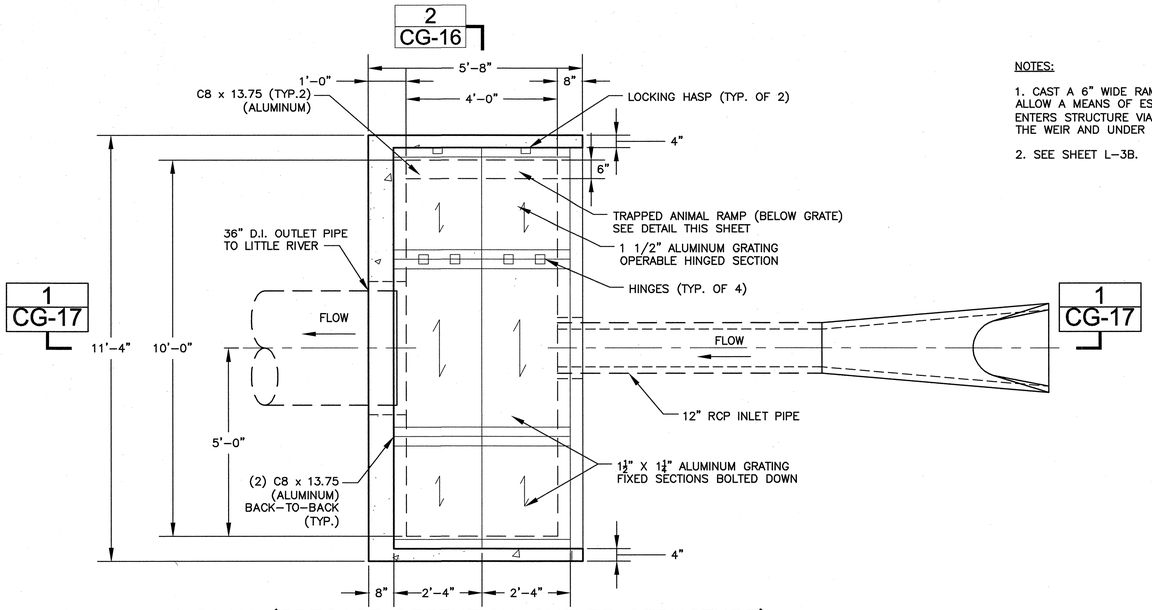

PLAN (PRECAST DETENTION OUTLET STRUCTURE)

1/2" = 1'-0"

2
CG-16

NOTES:

1. CAST A 6" WIDE RAMP IN THE WALL AS INDICATED TO ALLOW A MEANS OF ESCAPE FOR ANY ANIMAL THAT ENTERS STRUCTURE VIA PIPES OR 8" HIGH GAP OVER THE WEIR AND UNDER THE ALUMINUM GRATE.

2. SEE SHEET L-3B.

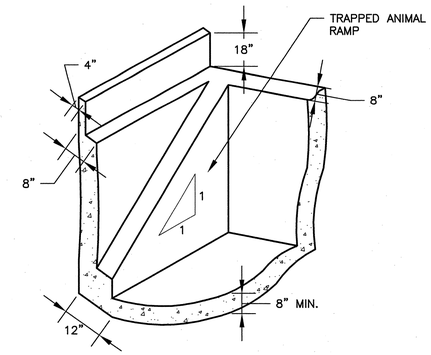

TRAPPED ANIMAL RAMP

N.T.S.

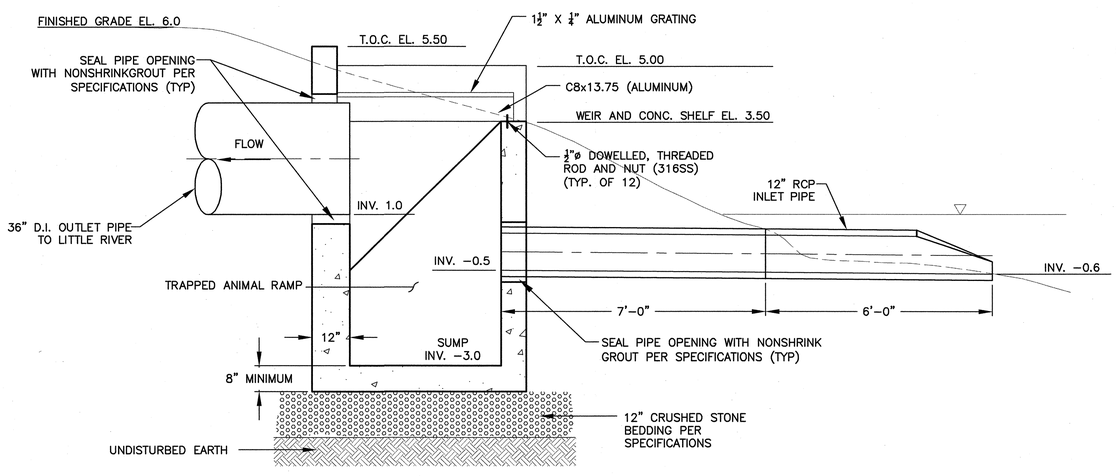

SECTION 1 / CG-17

1/2" = 1'-0"

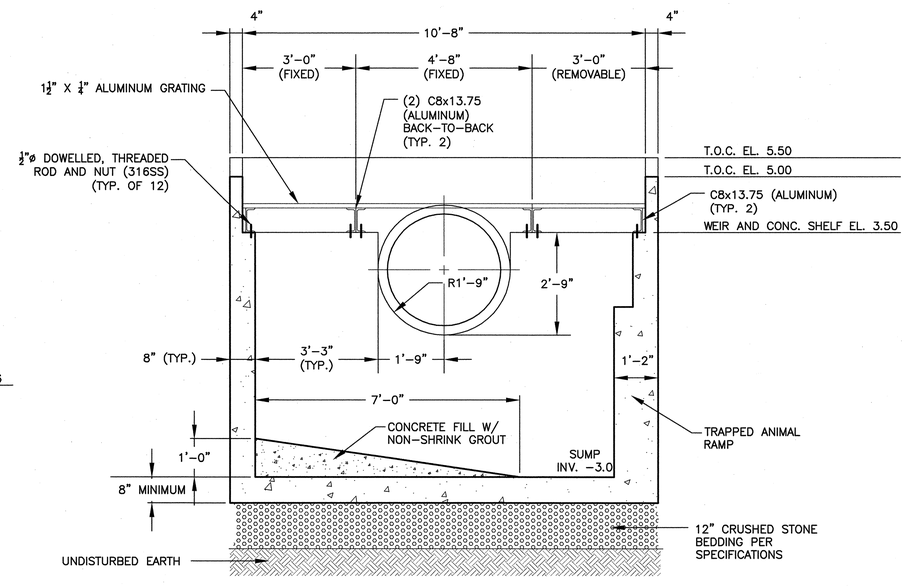

SECTION 2 / CG-17

1/2" = 1'-0"

CONFORMED SET

SEA
SEA CONSULTANTS INC.
Scientists/Engineers/Architects

MWH

Bioengineering GROUP
18 Commercial Street
Salem, MA 01970
T: 978.740.0096
F: 978.740.0097
www.bioengineering.com

COMMONWEALTH OF MASSACHUSETTS
MATTHEW DAVID TRAVERS
CIVIL
No. 45992
REGISTERED PROFESSIONAL ENGINEER
9/8/10

Scale	AS NOTED
Date	SEPTEMBER 1, 2010
Job No.	2220331
Designed by	KMR
Drawn by	AMF
Checked by	WCP
Approved by	MDT

No.	Description	Date
	REVISIONS	

THE WORKS
CAMBRIDGE DEPARTMENT OF PUBLIC WORKS

CITY OF CAMBRIDGE, MASSACHUSETTS
CAMBRIDGEPARK DRIVE AREA DRAINAGE IMPROVEMENTS
CONTRACT NO. 12
BASIN OUTLET STRUCTURE
PLAN AND SECTIONS

Sheet No. CG-17
File No.

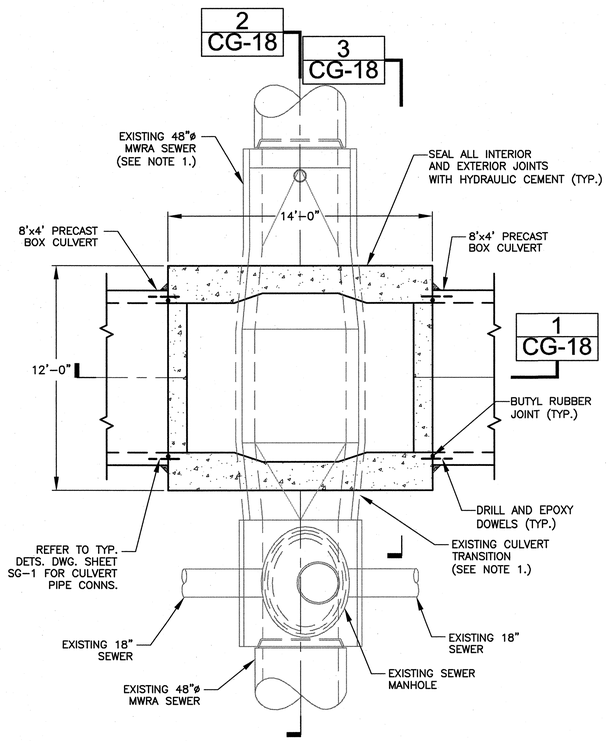

MWRA CROSSING STRUCTURE NO.2
TOP PLAN
1/4"=1'-0"

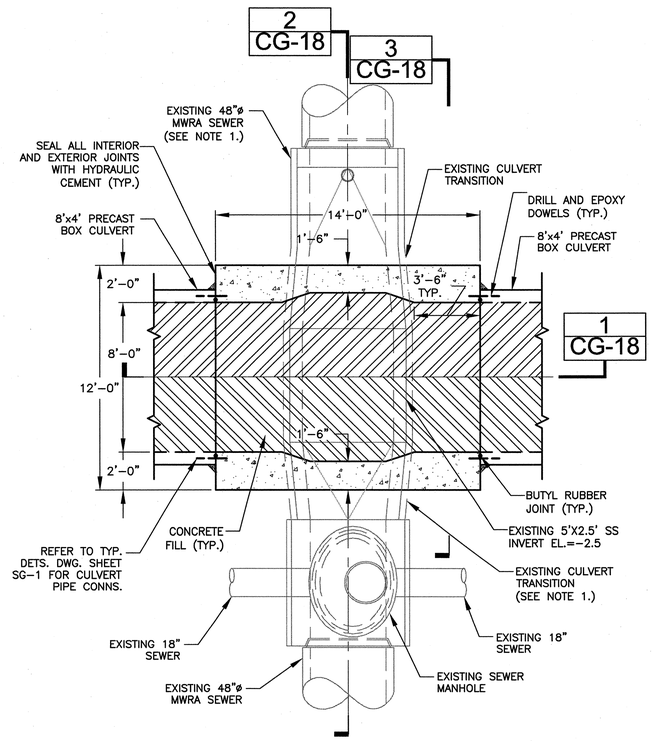

MWRA CROSSING STRUCTURE NO.2
BOTTOM PLAN
1/4"=1'-0"

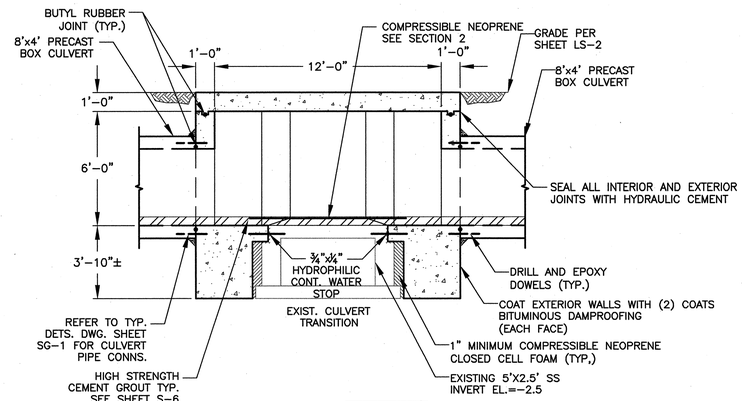

SECTION 1/CG-18
1/4"=1'-0"

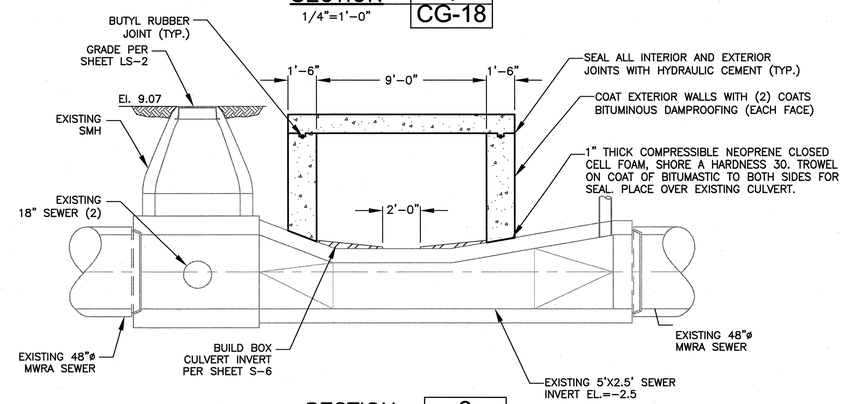

SECTION 2/CG-18
1/4"=1'-0"

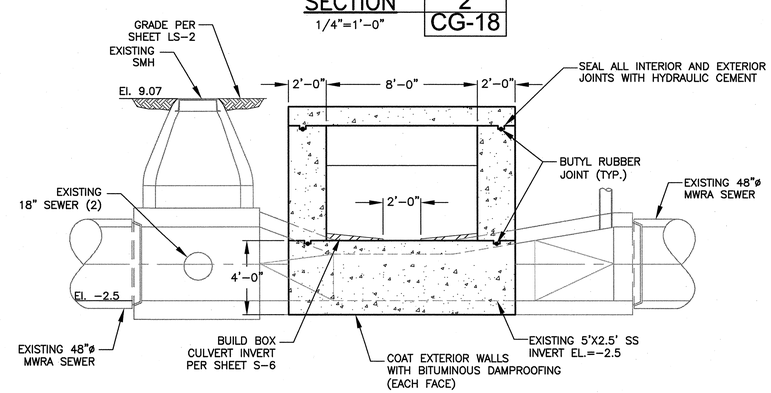

SECTION 3/CG-18
1/4"=1'-0"

NOTES:

1. BEFORE CONSTRUCTION THE CONTRACTOR SHALL FIELD VERIFY THE HORIZONTAL AND VERTICAL LOCATION, DIMENSIONS, AND INVERT ELEVATIONS OF THE EXISTING 48" MWRA SEWER AND CULVERT TRANSITION WITH A TEST PIT. THE CONTRACTOR SHALL NOTIFY THE ENGINEER OF ANY DISCREPANCIES PRIOR TO COMMENCEMENT OF WORK.

2. THE CONTRACTOR SHALL ADJUST THE INVERT ELEVATIONS OF THE CONCRETE FILL TO MATCH THE TOP OF THE EXISTING MWRA CULVERT TRANSITION TO ALLOW FOR CONTINUOUS GRAVITY FLOW ACROSS THE STRUCTURE.

3. INSTALL HYDROPHILIC (WATER STOP) GASKET AS SPECIFIED ALONG PIPE PERIMETER FOR EACH MWRA PIPE PENETRATIONS.

CONFORMED SET

SEA CONSULTANTS INC.
Scientists/Engineers/Architects

MWH

Bioengineering GROUP
18 Commercial Street
Salem, MA 01970
T: 978.740.0096
F: 978.740.0097
www.bioengineering.com

COMMONWEALTH OF MASSACHUSETTS — MATTHEW DAVID TRAVERS — CIVIL — No. 45992 — REGISTERED PROFESSIONAL ENGINEER — 9/6/10

Scale	AS NOTED
Date	SEPTEMBER 1, 2010
Job No.	2220331
Designed by	KMR
Drawn by	AMF
Checked by	WCP
Approved by	MDT

No.	Description	Date
	REVISIONS	

THE WORKS — CAMBRIDGE DEPARTMENT OF PUBLIC WORKS

CITY OF CAMBRIDGE, MASSACHUSETTS

CAMBRIDGEPARK DRIVE AREA DRAINAGE IMPROVEMENTS
CONTRACT NO. 12

MWRA CROSSING STRUCTURE NO.2
PLAN AND SECTIONS

Sheet No. CG-18

File No.