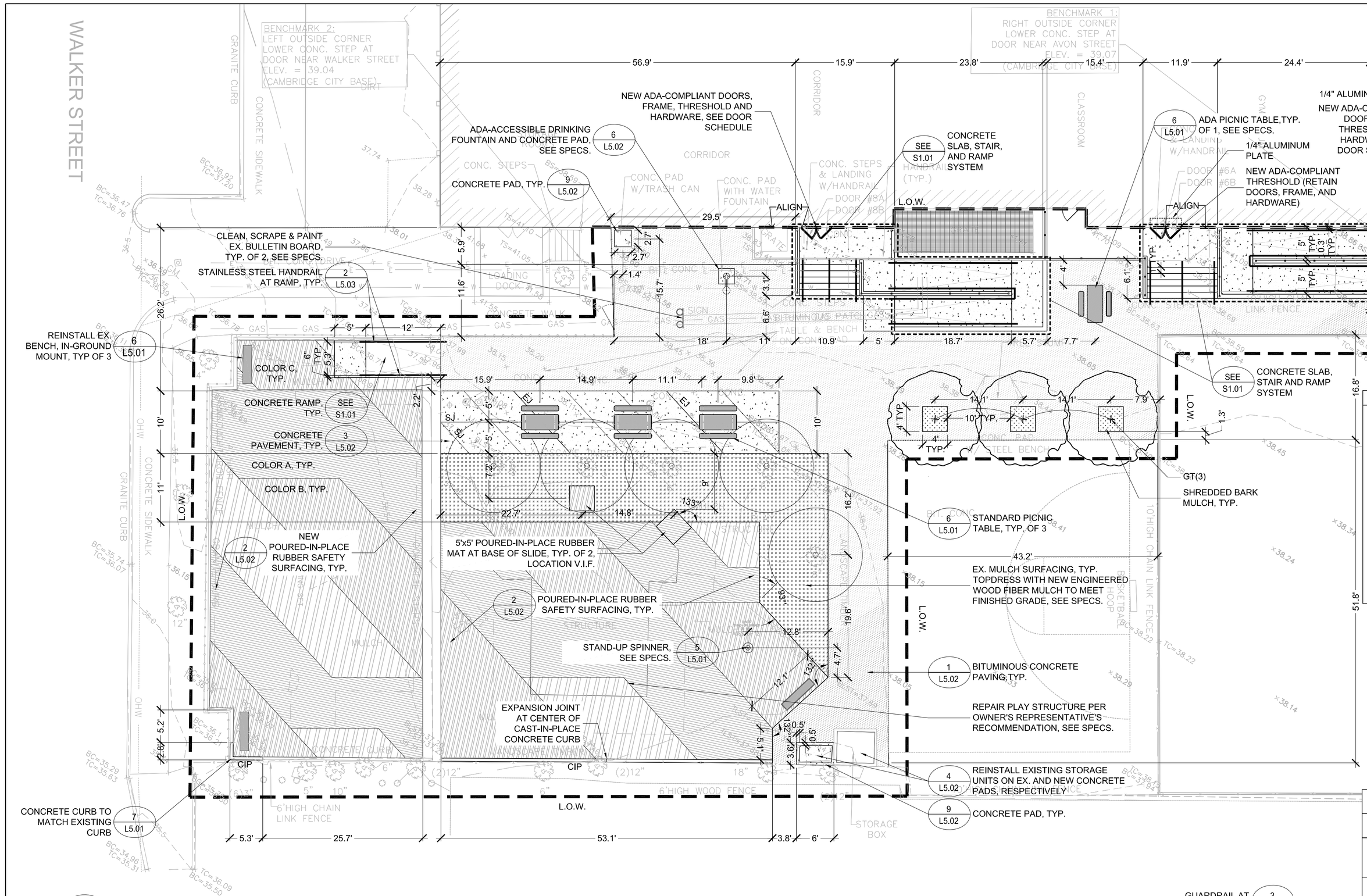

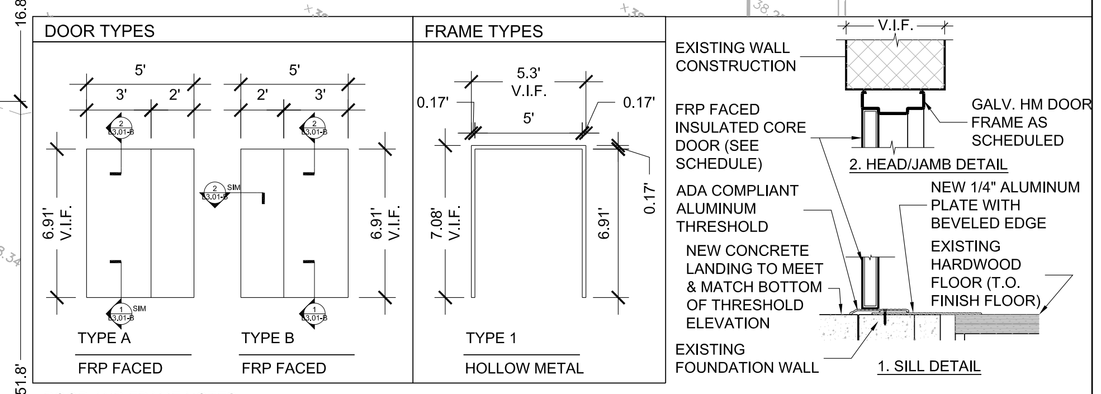

DOOR AND FRAME NOTES:

1. ALL HM STEEL DOOR FRAMES SHALL BE GALVANIZED AND PAINTED.
2. ALL HM FRAMES IN MASONRY OPENINGS TO BE INSULATED. COORDINATE AND INSTALL ALL INTERNAL FRAME CONDUIT FOR ELECTRIFIED LOCKS, HARDWARE, DOOR SILENCERS, ETC. AS REQUIRED.
3. SOME EXTERIOR PERSONNEL DOORS TO INCLUDE CARD READER AND ELECTRIC LOCK. COORDINATE AND INSTALL REQUIRED CONDUIT.
4. PROVIDE AIR-TIGHT WEATHER SEAL @ DOOR OPENING, SEAL DOOR FRAME & DOOR.
5. CONTRACTOR SHALL FIELD MEASURE AS-BUILT DOOR OPENINGS PRIOR TO FABRICATION/INSTALLATION OF DOORS TO ENSURE FIT OF SYSTEM COMPONENTS
6. PROVIDE ADDITIONAL PRESSURE-TREATED WOOD FRAMING AND/OR BLOCKING.
7. FFE ELEVATION TO MEET ADA COMPLIANT THRESHOLD AT DOORS #8A / #8B, IN LIEU OF 1/4" ALUMINUM PLATE.

DOOR SCHEDULE

GRAHAM AND PARKS SCHOOL

DOOR #	ROOM NAME	DOORS			FRAME		DETAILS	
		TYPE	MATERIAL	SIZE (W X H)	TYPE	MATERIAL	HEAD	SILL
5A / 5B	GYMNASIUM	B	FRP	2' X 6.91 / 3' X 6.91'	1	HM	2 / L3.01-B	1 / L3.01-B
8A / 8B	CORRIDOR	A	FRP	3' X 6.91' / 2' X 6.91'	1	HM	2 / L3.01-B	1 / L3.01-B ('SEE NOTE 7)

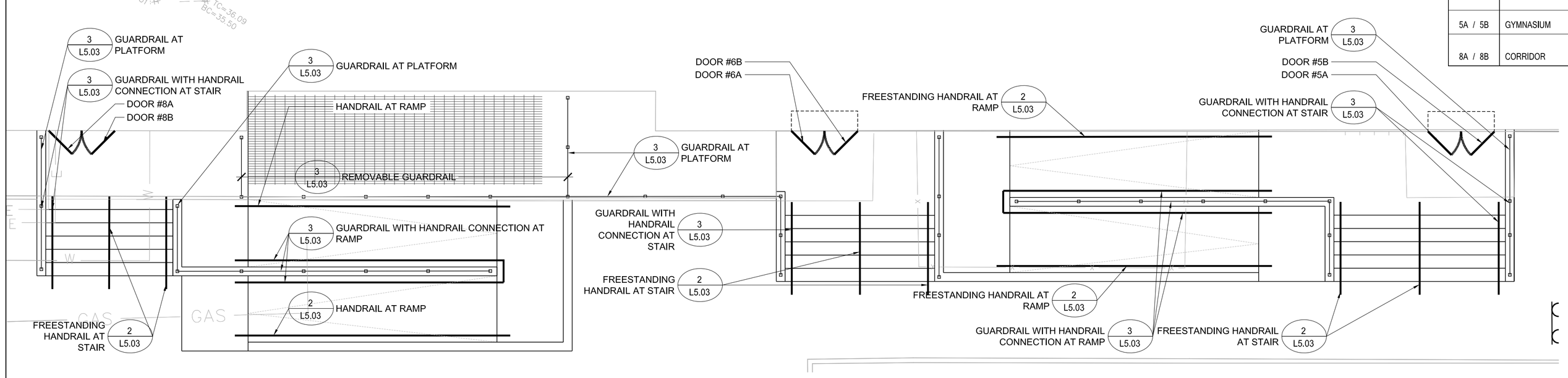

HANDRAIL AND GUARDRAIL ENLARGEMENT

LAYOUT AND MATERIALS LEGEND

- L.O.W. — LIMIT OF WORK LINE
- BITUMINOUS CONCRETE PAVING, TYP. — 1 / L5.02
- NEW CONCRETE PAVEMENT, TYP. — 3 / L5.02
- POURED-IN-PLACE RUBBER SAFETY SURFACING COLOR A — 2 / L5.02
- POURED-IN-PLACE RUBBER SAFETY SURFACING COLOR B — 2 / L5.02
- POURED-IN-PLACE RUBBER SAFETY SURFACING COLOR C — 2 / L5.02
- SHREDDED BARK MULCH, TYP. SEE SPECS.
- EX. MULCH SURFACING, TYP. TOPDRESS WITH NEW ENGINEERED WOOD FIBER MULCH TO MEET FINISHED GRADE, SEE SPECS.
- CIP — CAST-IN-PLACE CONCRETE CURB — 7 / L5.01
- HANDRAIL, TYP. — 2 / L5.03
- GUARDRAIL, TYP. — 3 / L5.03
- PROPOSED TREE
- EX. TREE TO REMAIN
- NEW BUILDING DOOR & THRESHOLD, TYP.
- REINSTALLED EX. STEEL PICKET FENCE & GATE
- EX. BENCH
- 15.7'-0" — TYP. DIMENSION
- 135° — TYP. ANGULAR DIMENSION

PLANT SCHEDULE

KEY	QTY	COMMON NAME	BOTANICAL NAME	SIZE	NOTES
GT	3	Gledistisa tricanthos v. Inermis 'Skyline'	Skyline Honeylocust	3-4" CAL. B&B	

NOTE: SEE DETAIL 5, SHEET L5.03 FOR TREE PLANTING DETAIL, TYP.

Project:

CITY OF CAMBRIDGE

Graham & Parks School Front Entry and Back Schoolyard Improvements

Spurr
Weston&Sampson's DESIGN STUDIO
85 Devonshire Street, 3rd Floor
Boston, MA 02109
(617) 412-4480 (800) Sampson
www.westonandsampson.com

Consultants:

Revisions:

Rev	Date	Description

Seal:

CONSTRUCTION DOCUMENTS

Date:	05.14.15
Scale:	AS SHOWN
Drawn By:	CB
Reviewed By:	ERB
Checked By:	CFR
Approved By:	ERB

Drawing Title:

BACK SCHOOLYARD LAYOUT AND MATERIALS PLAN

Sheet Number:

L3.01-B